Chevy/GMC Pickup & Bronco

Dynacorn International Inc.

dii

2010

Dynacorn International Inc.

Muscle Car Restoration Parts

(715) 937-2520

www.musclecar-parts.com

Chevy®/GMC® Pickup Index

A
Accelerator Pedal Assembly: 57
Antennas: 50
Arm Rest Bases: 43

B
Back Up Lamps & Lenses: 67
Battery Trays & Hold Downs: 8,9
Bedside Panels: 29
Bed Enforcements: 27
Bed Floor Pans, Complete: 26
Bed Moldings: 56
Bed Panels Front & Rear: 28, 29
Bed Steps & Hangers: 30
Bed Under-frames: 28
Body Shims: 4
Bumpers: 1,2
- Brackets: 2,3
- Fillers: 3
- Guards: 2

C
Cab Corners & Braces: 19, 20
Cab Floor Battery Cover: 22
Cab Floor Shift Cover: 22, 23
Cab & Quarter Trim Moldings: 55
Cab Rear Outer Panels: 17,18
Coil Spring Rear Retainer: 70
Cowl Panels: 13
Cowl Vent Panel: 20
Crossmember Mount: 14

D
Dash Bezels & Appliques: 61
Dash Speaker Grilles: 63
Dome Lamp Assemblies: 68
Door
- Access Plates & Inner Panels: 32
- Edge Guard: 42
- Frame Outer Panels & Cowls: 20
- Glass Channel Run & Sash: 42
- Handles: 39
- Handle Trim Washer: 40
- Hinges: 40
- Jamb Vent Grille: 42
- Latches: 40, 41
- Lock Knobs & Molding: 42
- Relays: 41
- Shells: 33, 34, and 73
- Skin (Lower): 32
- Step W/Inner Rocker: 30
- Trim Channels:38

Door
- Upper Guide Rails: 38
- Weatherstripping: 43
- Window Frames & Trim: 35
- Window Frames W/Glass: 35
- Window Glass & Tracks: 36

Drip Rail Moldings: 52

E
Emergency Brake Assy. & Hardware: 57
Engine Mounts: 14
Eyebrow Molding: 48, 49

F
Fender
- Front: 4,5
- Rear: 6
- Moldings: 52
- Shield Brackets & Skirt Brace: 6
- Splash Shields, Inner: 6

Firewalls: 21
Floor Pans: 22, 23
Fuel Senders: 25

G
Gas Tanks, Brackets & Filler Kit: 25
Gauges: 69,70
Glovebox Doors & Hardware: 64
Grilles & Components: 43-49
Grille Moldings: 48-50

H
Headlamp Buckets & Bezels: 43-49
Headlamp Retainer Ring: 43-49
Headlamp Switches: 68
Heater Box: 60
Hoods: 10
- Hinges: 11
- Latches & Latch Panel: 12
- Molding & Ornament: 50

Horns: 67

I
Instrument Bezels & Lenses: 62

K
Kick Panel / “A” Pillar Assembly: 21

L
License Panel Brackets, Rear: 24
License Plate Lamp: 67
Locks: 71

M
Mirrors
- Exterior, & Arms: 54
- Interior, & Brackets: 60

P
Parking Lamp Assemblies: 65
Parking Lamp Bezels: 64
Pedal Pads & Trim, Brake: 57

R
Radiator Supports: 8
Radio Speaker Covers: 63
Rocker Panels: 24
Roll Pan, Rear: 4
Roof Panels: 15, 16
Roof Panel Brace, Front: 14
Running Boards: 30

S
Scuff Plates: 55
Seat Adjustment Handle: 63
Shift Lever: 57
Shock Absorbers& Bracket: 70
Side Markers: 64
Steering Wheels: 58, 59
- Horn Contact Pin Spring: 58

Stone Deflectors: 4

T
Tailgates: 31
Tailgate Hardware: 32
Tailgate Moldings: 55
Tail Lamp Assemblies: 66, 67
Tail Lamp Bezels & Lenses: 66
Tail Lamp Housings: 66
Throttle Linkage: 57
Timing Chain Cover: 7
Transmission Cover: 23

V
Vent Window: 38
Vent Window Assemblies: 37
Vent Window Cranks & Handle: 40
Vent Window Frames: 38

W
Wheel Opening Moldings: 51
Window Moldings, Front & Rear: 53
Window Panel, Inner & Outer: 16, 17
Window Regulators: 38, 39
Windshield Filler Panel & Pillars: 9
Wiper Motor Transmission Arm: 68

GM Restoration Parts
27-22503-53964
The GM RESTORATION PARTS EmBlem is a trademark of General Motors Corp.

General Motors Trademarks are under License to Dynacorn International Inc.

1110G

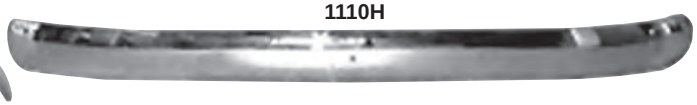
1110H

1110J

1110G	1947-55 1st Series	Front Bumper	$133.75 ea
1110H	1947-53	Rear Stepside Bumper	$133.75 ea
1110J	1954-55 1st Series	Rear Stepside Bumper	$133.75 ea

1110F

1110E

1110EA

1110F	1955-59	Front Bumper	$133.75 ea
1110E	1955-59	Rear Stepside Bumper	$133.75 ea
1110EA	1958-59	Rear Fleetside Bumper	$133.75 ea

1110A

1116C

1110C

1110A	1960-62	Front Bumper	$133.75 ea
1116C	1960-66	Rear Stepside Bumper	$133.75 ea
1110C	1960-62	Rear Fleetside Bumper, without license plate hole	$133.75 ea
1110CA	1960-62	Rear Fleetside Bumper, with license plate hole	$133.75 ea

1110B

1110D

1108

1110B	1963-66	Front Bumper	$133.75 ea
1110D	1963-66	Rear Fleetside Bumper	$133.75 ea
1108	1967-68	Front Bumper (no holes), GMC	$133.75 ea

Bumpers, continued

1108A

1116A

1116B

1109

1108A	1967-72	Front Bumper, GMC	$133.75 ea
1116A	1967-87	Rear Stepside Bumper	$133.75 ea
1116B	1967-72	Rear Fleetside Bumper	$133.75 ea
1109	1971-72	Front Bumper	$133.75 ea

Bumper Guards

1125

1126A

1126

1127

1128

1125	1947-55	Front Bumper Guards	$73.00 pr
1126	1955-59	Front Bumper Guards, Chevy	$105.00 pr
1126A	1957	Front Bumper Guards, GMC	$174.25 pr
1127	1960-62	Front Bumper Guards	$105.50 pr
1128	1963-66	Front Bumper Guards	$107.00 pr
1129	1967-72	Front Bumper Guards	$110.00 pr

Bumper Brackets

1111V

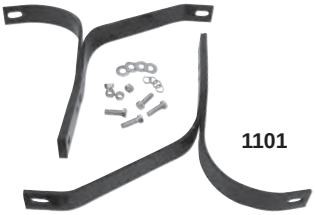
1101

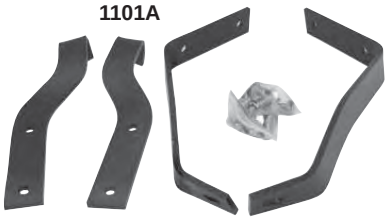
1101A

1111V	1947-55 1st Series	Front Bumper Brackets	$70.25 set
1101	1947-55 1st Series	Rear Bumper Brackets	$71.50 set
1111W	1955-57	Front Bumper Brackets	$79.75 set
1101A	1955-59	Rear Bumper Brackets	$62.25 set
1111X	1958-59	Front Bumper Brackets	$67.50 set

Bumper Brackets, continued

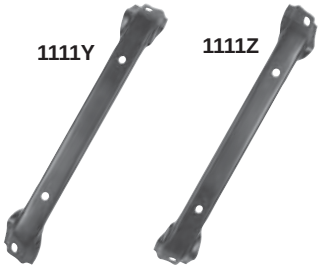

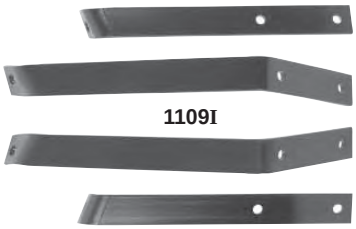

1111Y	1960-66	Front Bumper Bracket RH	$23.00 ea
1111Z	1960-66	Front Bumper Bracket LH	$23.00 ea
1109I	1960-62	Rear Bumper Brackets, 4 pcs., Fleetside	$81.00 set
1109J	1963-66	Rear Bumper Brackets, 2 pcs., Fleetside	$54.00 pr
1109L	1963-66	Rear Bumper Bracket, Stepside	$87.75 set

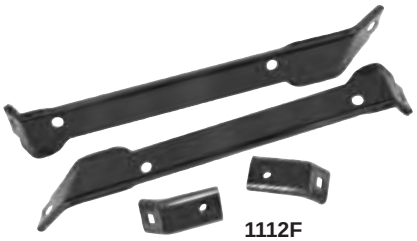

1112E	1967-70	Front Bumper Braces, 4 pcs. (Also fits 1967-72 GMC)	$52.75 set
1109K	1967-72	Rear Bumper Brackets, 4 pcs.	$58.25 set
1112F	1971-72	Front Bumper Braces, 4 pcs.	$52.75 set

Bumper Fillers

1096A	1947-53	Bumper Filler	$74.25 ea
1096	1947-54	Bumper Filler, GMC	$81.00 ea
1096B	1954-55 1st Series	Bumper Filler	$71.75 ea
1096H	1955-56	Bumper Filler W/ Grille Brackets	$81.00 ea
1096G	1957	Bumper Filler W/O Grille Brackets	$73.00 ea
1096F	1958-59	Bumper Filler	$71.75 ea
1096C	1967-68	Bumper Filler	$38.00 ea

Body Shims

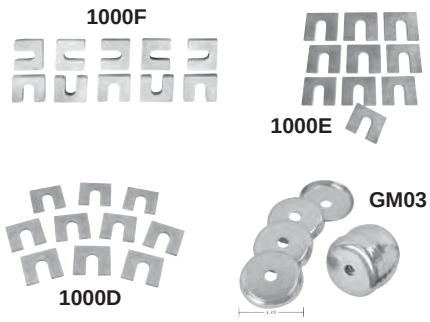

1000F	1964-72	Body Shims, 6 mm, 10 pcs.
		$8.00 set
1000D	1964-72	Body Shims, 3 mm, 10 pcs.
1000E	1964-72	Body Shims, 1.6 mm, 10 pcs.
		$4.00 set
GM03		Body Washers, 20 pcs.
		$13.50 set

Stone Deflectors

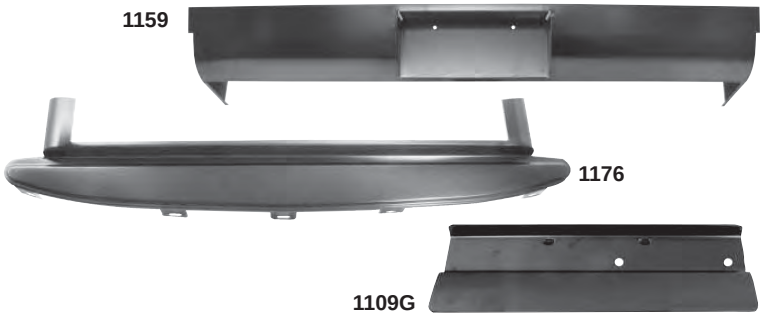

1176	1947-54	Rear Gravel Shield
		$114.75 ea
1159	1954-87	Rear Roll Pan for Stepside
		$101.25 ea
1109H	1967-72	Rear Bumper Deflector for Fleetside RH
1109G	1967-72	Rear Bumper Deflector for Fleetside LH
		$9.50 ea

Front Fenders

1097P	1947-53	Front Fender	RH	**$309.25 ea**
1097Q	1947-53	Front Fender	LH	**$309.25 ea**
1097R	1954-55 1st Series	Front Fender	RH	**$309.25 ea**
1097S	1954-55 1st Series	Front Fender	LH	**$309.25 ea**
1097T	1955-56	Front Fender	RH	**$309.25 ea**
1097U	1955-56	Front Fender	LH	**$309.25 ea**

Website: www.musclecar-parts.com 2010 Phone: (715) 937-2520

1097W

1097Y

1099J

1099C

1099A

1098

1097W	1957	Front Fender RH	**$309.25 ea**
1097X	1957	Front Fender LH	**$309.25 ea**
1097Y	1958-59	Front Fender RH	**$309.25 ea**
1097Z	1958-59	Front Fender LH	**$309.25 ea**
1099J	1960-66	Front Fender RH	**$187.75 ea**
1099K	1960-66	Front Fender LH	**$187.75 ea**
1099C	1967	Front Fender RH	**$187.75 ea**
1099D	1967	Front Fender LH	**$187.75 ea**
1099A	1968	Front Fender RH	**$187.75 ea**
1099B	1968	Front Fender LH	**$187.75 ea**
1098	1969-72	Front Fender RH	**$155.25 ea**
1099	1969-72	Front Fender LH	**$155.25 ea**

Rear Fenders

1097E	1947-55 1st Series	Rear Fender Stepside RH	**$363.25 ea**
1097F	1947-55 1st Series	Rear Fender Stepside LH	**$363.25 ea**
1097C	1955-66	Rear Fender Stepside RH (Also fits 1955-66 GMC)	**$349.75 ea**
1097D	1955-66	Rear Fender Stepside LH (Also fits 1955-66 GMC)	**$349.75 ea**
1097G	1968-72	Rear Fender Stepside RH	**$435.00 ea**
1097H	1968-72	Rear Fender Stepside LH	**$435.00 ea**

Skirt Braces

1091C	1947-54	Fender Skirt Brace, LH	**$43.25 ea**

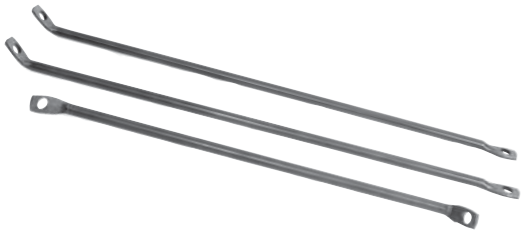

1097DA	1955-66	Rear Fender Brace, 3 pieces	**$11.00 set**

Shield Brackets

1099JC	1960-66	Fender Shield Brackets	**$48.75 pr**

Splash Shields

1098A	1967-72	Inner Fender Splash Shield, RH	
1098B	1967-72	Inner Fender Splash Shield, LH	
			$32.50 ea

Fender Extensions

1096W

1099KA

1096W	1955-57	Front Extension RH
1096X	1955-57	Front Extension LH

$43.25 ea

1099JA	1960-66	Front Extension RH
1099KA	1960-66	Front Extension LH

$93.25 ea

Inner Fenders

1090A

1090A	1947-54	Inner Fender RH Chevy
1090B	1947-54	Inner Fender LH Chevy

$120.25 ea

1091A	New	1947-54	Inner Fender RH GMC
1091B	New	1947-54	Inner Fender LH GMC

Coming Soon!

1090C

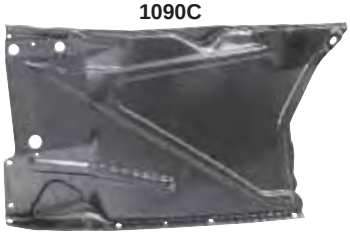

1090C	1955-57	Inner Fender RH Chevy or GMC
1090D	1955-57	Inner Fender LH Chevy or GMC

$114.75 ea

1090E

1090E	1958-59	Inner Fender RH
1090F	1958-59	Inner Fender LH

$114.75 ea

Inner Fender/Wheelhouses

1099E

1099E	1960-66	Inner Fender RH
1099F	1960-66	Inner Fender LH

$160.75 ea

1099G

1099G	1967-72	Inner Fender RH
1099H	1967-72	Inner Fender LH

$62.25 ea

1097A

1097A	1967-72	Rear Inner Wheelhouse, Fits RH/LH, Fleetside

$66.50 ea

Timing Chain Covers

1200

1202

1200	1954-62	Timing Chain Cover, 6 cyl., Painted

$35.25 ea

1202	1954-62	Timing Chain Cover, 6 cyl., Chrome

$60.75 ea

Radiator Supports

1119Z

1119ZA

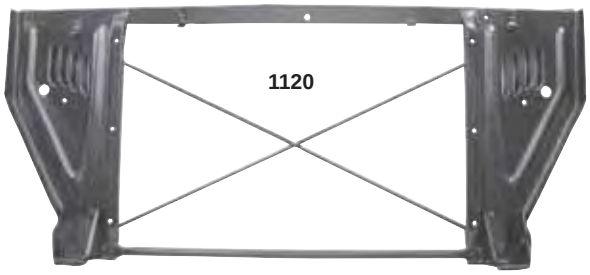
1120

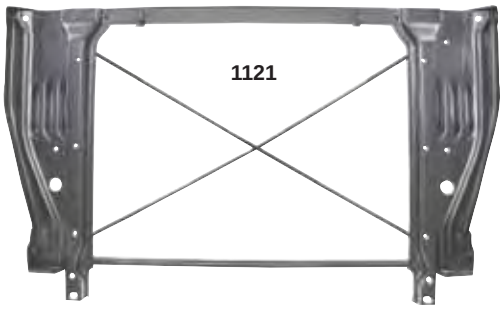
1121

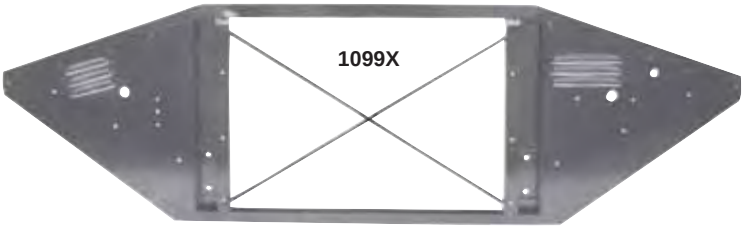
1099X

1099Y

1099Z

1119Z		1947-54	Radiator Support w/Ledge Bracket, Chevy	**$214.75 ea**
1119Y	New	1947-54	Radiator Support, GMC	***Coming Soon!***
1119ZA		1947-54	Radiator Grille Lower Support	**$132.50 ea**
1120		1955-57	Radiator Support, Chevy	**$133.75 ea**
1121		1958-59	Radiator Support, Chevy	**$133.75 ea**
1099X		1960-66	Radiator Support	**$128.25 ea**
1099Y		1967-68	Radiator Support	**$182.25 ea**
1099Z		1969-72	Radiator Support	**$195.75 ea**

Battery Trays

1100K

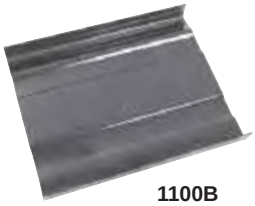
1100B

1100D

1100K	1947-55 1st Series	Battery Tray Hold Down	**$13.50 ea**
1100B	1947-55 1st Series	Battery Tray Bottom	**$13.50 ea**
1100D	1947-55 1st Series	Battery Tray Assembly	**$40.50 ea**

Battery Trays/Clamps, cont'd.

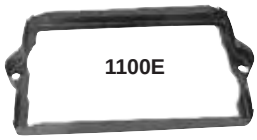

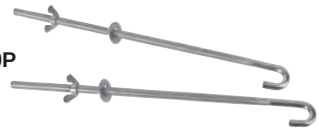

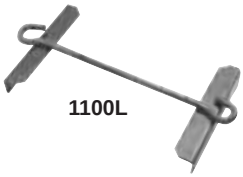

1100E	1955-57	Battery Tray Hold Down	$9.50 ea
1100A	1955-57	Battery Tray Bottom	$19.00 ea
1100N	1955-57	Battery Tray Assembly	$38.00 ea
1100P	1955-56	Battery Tray Hold Down J-Bolt	$5.50 ea
1100L	1958-66	Battery Tray Hold Down	$5.50 ea
1100C	1958-59	Battery Tray	$36.50 ea

1100H	1960-66	Battery Tray	$35.25 ea
1047E	1967-80	Battery Tray Clamp	$3.00 ea
1100J	1967-72	Battery Tray Bottom - 3 hole mounting	$12.25 ea
1100M	1967-72	Battery Tray Bottom	$9.50 ea
1100F	1967-72	Battery Tray Assembly W/O AC Bracket	$43.25 ea
1100G	1967-72	Battery Tray Assembly With AC Bracket	$51.50 ea

Windshield Filler, Pillars

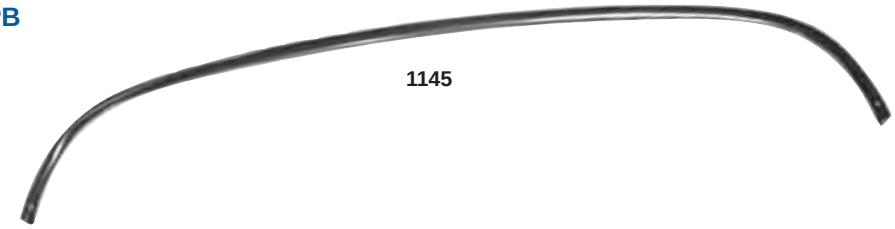

1106PA	New	1947-54	Windshield Plliar, RH	$13.50 ea
1106PB	New	1947-54	Windshield Plliar, LH	$13.50 ea
1145		1955-59	Windshield Filler Panel	$65.00 ea

1099T

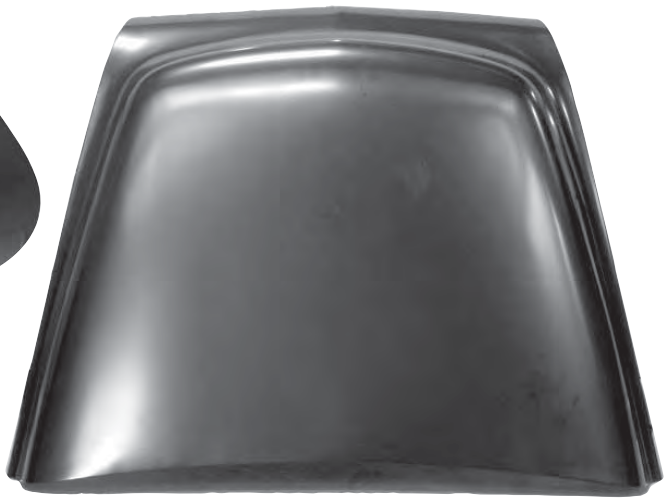

1099R

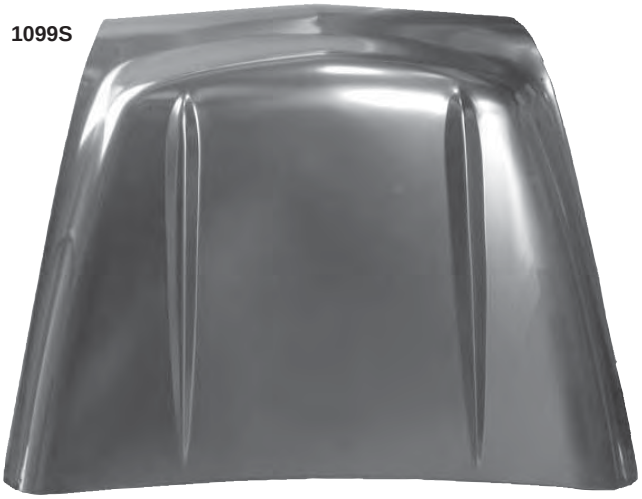

1099S

1099P

1099Q

1099T	1947-52	Hood	**$475.00 ea**
1099R	1955-56	Hood	**$470.00 ea**
1099S	1957	Hood	**$470.00 ea**
1099P	1967-68	Hood - Standard	**$445.00 ea**
1099Q	1967-68	Hood - With Cowl Induction	**$445.00 ea**

Hoods, continued

1099L

1099M

1099L	1969-72	Hood -Standard	**$400.00 ea**
1099M	1969-72	Hood - With Cowl Induction	**$445.00 ea**

Hood Hinges

1109R

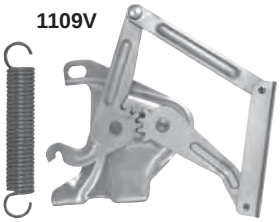

1109V

1110

1109U

1109Y

1109R	1947-55	Hood Hinge RH	**$33.75 ea**
1109S	1947-55	Hood Hinge LH	**$33.75 ea**
1109T	1955-57	Hood Hinge with Spring RH	**$56.75 ea**
1109U	1955-57	Hood Hinge with Spring LH	**$56.75 ea**
1109V	1958-59	Hood Hinge with Spring RH	**$60.75 ea**
1109W	1958-59	Hood Hinge with Spring LH	**$60.75 ea**
1109X	1960-66	Hood Hinge RH	**$48.75 ea**
1109Y	1960-66	Hood Hinge LH	**$48.75 ea**
1110	1967-72	Hood Hinge LH	**$47.25 ea**
1111	1967-72	Hood Hinge RH	**$47.25 ea**

Hood Latches

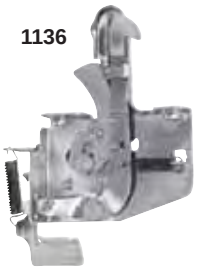

1134Z	1947-54	Hood Latch

$58.25 ea

1135	1955-57	Hood Latch
1136	1958-59	Hood Latch

$52.75 ea

1137	1967-68	Hood Latch

$59.50 ea

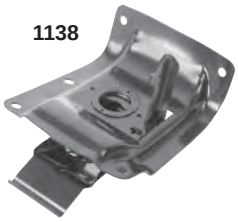

1138	1969-70	Hood Latch
1139	1971-72	Hood Latch

$59.50 ea

Hood Latch Panels

1121X	1947-54	Chevy Hood Latch Panel - Stainless

$226.75 ea

1121W	1947-54	Chevy Hood Latch Panel - Painted

$147.00 ea

1121Y	New	1947-54	GMC Hood Latch Panel - Chrome

Coming Soon!

1121Z	1947-54	GMC Hood Latch Panel - Painted

$155.25 ea

1122	1955-57	Hood Latch Panel

$47.25 ea

1123	1958-59	Hood Latch Panel

$47.25 ea

1106H		1947-53	Lower Cowl Panel	**$241.75 ea**
1099U		1947-53	Cowl Vent Cover	**$120.25 ea**

1106V

1106V	New	1955-59	Cowl Vent Grille	**$51.50 ea**
1106T		1955-59	Inner Cowl Panel	**$214.75 ea**
1106U		1955-59	Outer Cowl Panel	**$228.25 ea**
1105Y		1955-59	Outer Cowl Panel, RH	**$66.25 ea**
1105Z		1955-59	Outer Cowl Panel, LH	**$66.25 ea**

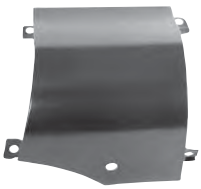

1106Y		1960-66	Outer Cowl Panel, RH	**$89.25 ea**
1106Z		1960-66	Outer Cowl Panel, LH	**$89.25 ea**
1106X	New	1967-72	Cowl Vent Grille	***Coming Soon!***

Dash Panel

1106E	1947-53	Dash Panel, Steel	**$336.25 ea**

Crossmember Mt.

1206	1947-59	Crossmember Mount w/hardware, V8	**$47.25 ea**

Engine Mounts

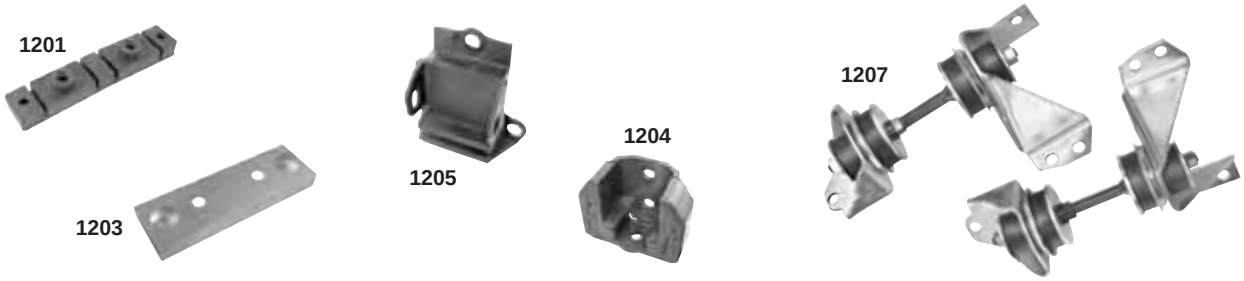

1201	1947-54	Front Engine Mount, 6 cylinder	**$8.25 ea**
1203	1947-55	Front Engine Mt. Base Plate, 6 cylinder	**$6.75 ea**
1204	1947-53	Rear Engine Mount, 6 cylinder	**$12.25 ea**
1205	1947-59	Engine Mount, V8 Small Block	**$8.25 ea**
1207	1955-59	Front Engine Mounts, V8	**$114.75 pr**

Roof Support

1112L	New	1947-54	Front Roof Panel Brace	**$52.75 ea**

1112N

1112N		1947-55 1st Series	Roof Panel	**$303.75 ea**
1112M	New	1947-54	Inner Roof Support Panel	***Coming Soon!***

1112P

1112Q

1112P	1955-59	Roof Panel Skin	**$303.75 ea**
1112Q	1955-59	Inner Roof Panel	**$375.00 ea**

Roof Panels, continued

1112R	New	1967-72	Roof Panel	*Coming Soon!*

Window Panels

1106M

1106J

1106M		1947-53	Inner Rear Window Panel, 3 Window	$282.50 ea
1106S	New	1947-54	Inner Rear Window Panel, 1 Window	$309.50 ea
1106J		1947-53	Outer Rear Window Panel 3 Window	$335.00 ea
1106L	New	1947-54	Outer Rear Window Panel 1 Window	$335.00 ea

Window Panels, cont'd.

Truck Freight ONLY

1107F	1955-59	Inner Rear Window Panel, Small Window	**$160.00 ea**
1107G	1955-59	Inner Rear Window Panel, Big Window	**$241.75 ea**

Cab Components

Truck Freight ONLY

RESTORER'S DYNACORN CERTIFIED CHOICE

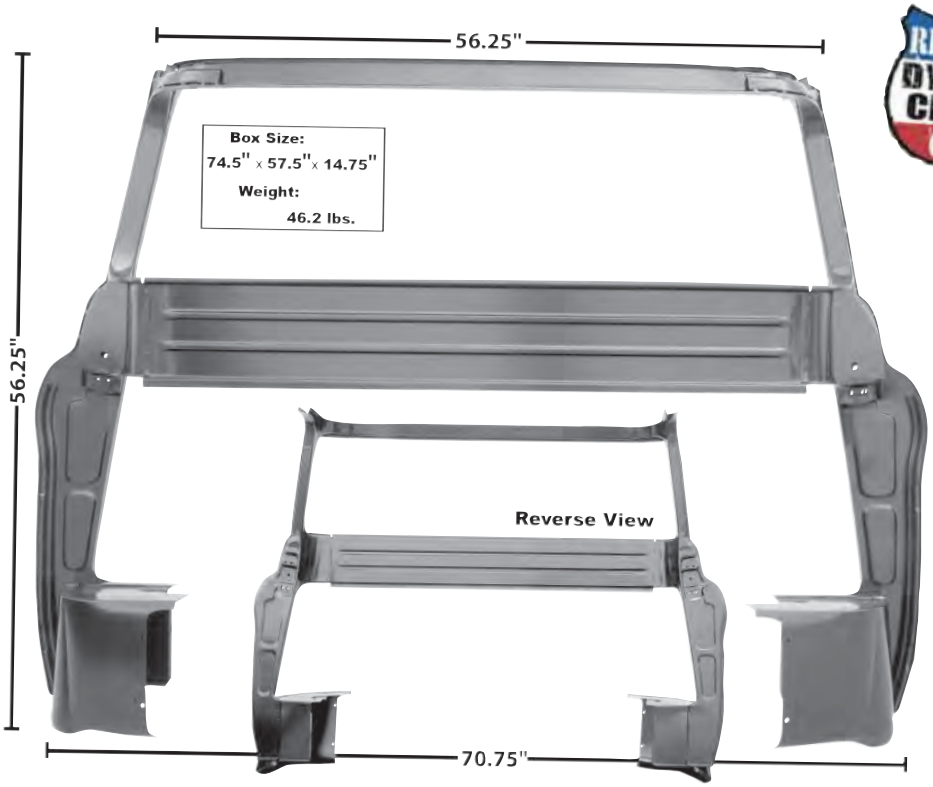

Does Not Qualify For Free Freight Program

1107X	New	1955-59	Cab Rear Inner Panel Large Window "B" Pillar	**$430.00 ea**

Does Not Qualify For Free Freight Program

1107B	1955-59	Cab Rear Outer Panel Small Window	**$445.00 ea**

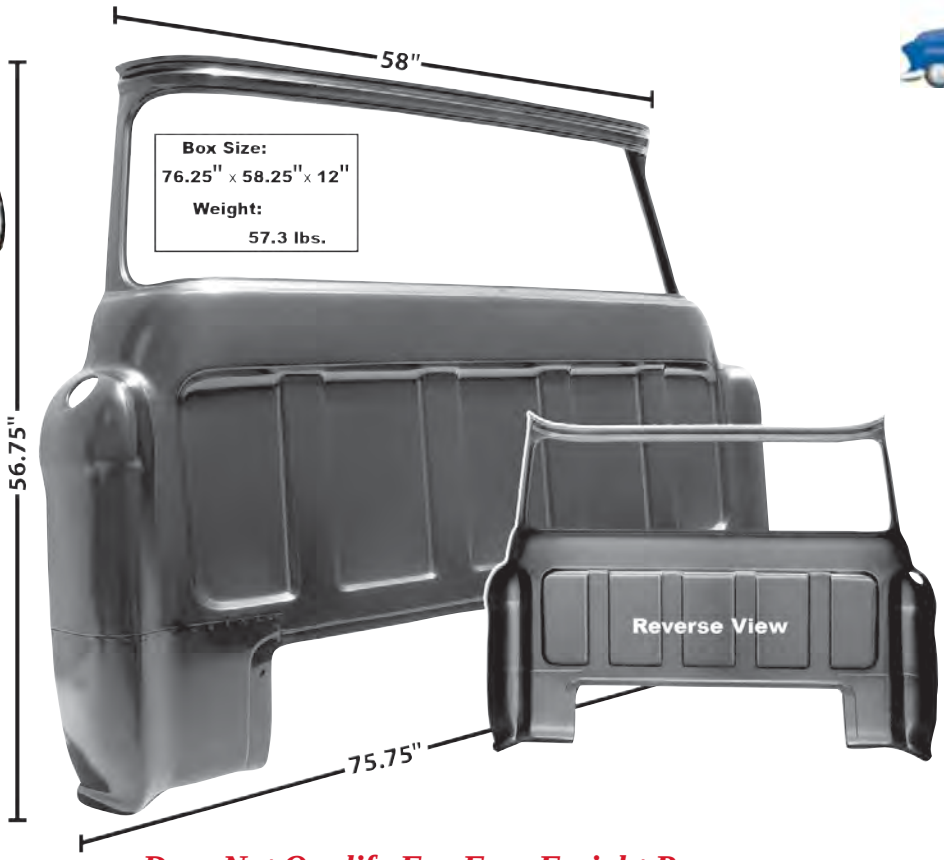

Does Not Qualify For Free Freight Program

1107D	1955-59	Cab Rear Outer Panel Large Window	**$450.00 ea**

Cab Components, cont'd.

1106C		1947-54	Cab Rear Lower Outer Panel	$349.75 ea
1106CA	New	1947-54	Cab Rear Support Panel	*Coming Soon!*
1106CB	New	1947-54	Cab Rear Outer Braces, 3 pieces	$44.75 set
1106CC	New	1947-54	Cab Rear Outer Cross Panel	$44.75 ea

Cab Corners

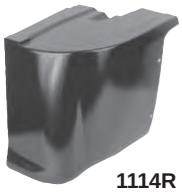

1114G	1947-54	Cab Corner RH	$27.00 ea
1114H	1947-54	Cab Corner LH	$27.00 ea
1114A	1955-59	Cab Corner Outer RH	$27.00 ea
1114B	1955-59	Cab Corner Outer LH	$27.00 ea
1114R	1955-59	Cab Corner Inner RH	$66.25 ea
1114S	1955-59	Cab Corner Inner LH	$66.25 ea
1114C	1960-66	Cab Corner RH	$15.00 ea
1114D	1960-66	Cab Corner LH	$15.00 ea
1114E	1967-72	Cab Corner RH	$15.00 ea
1114F	1967-72	Cab Corner LH	$15.00 ea

Mud Guards

1099JB

1099KB

1099JB	1960-66	Cab Corner Mud Guard RH	**$33.75 ea**
1099KB	1960-66	Cab Corner Mud Guard LH	**$33.75 ea**

Door Frame Panels & Cowls

1106DA

1106D

RESTORER'S DYNACORN CERTIFIED CHOICE

1106P

1106N

Truck Freight ONLY

1106N	1947-54	Door Frame Outer Panel RH	**$400.00 ea**
1106P	1947-54	Door Frame Outer Panel LH	**$400.00 ea**
1106D	1947-54	Cowl Panel RH	**$52.75 ea**
1106DA	1947-54	Cowl Panel LH	**$52.75 ea**

Kick Panel / "A" Pillar Assembly

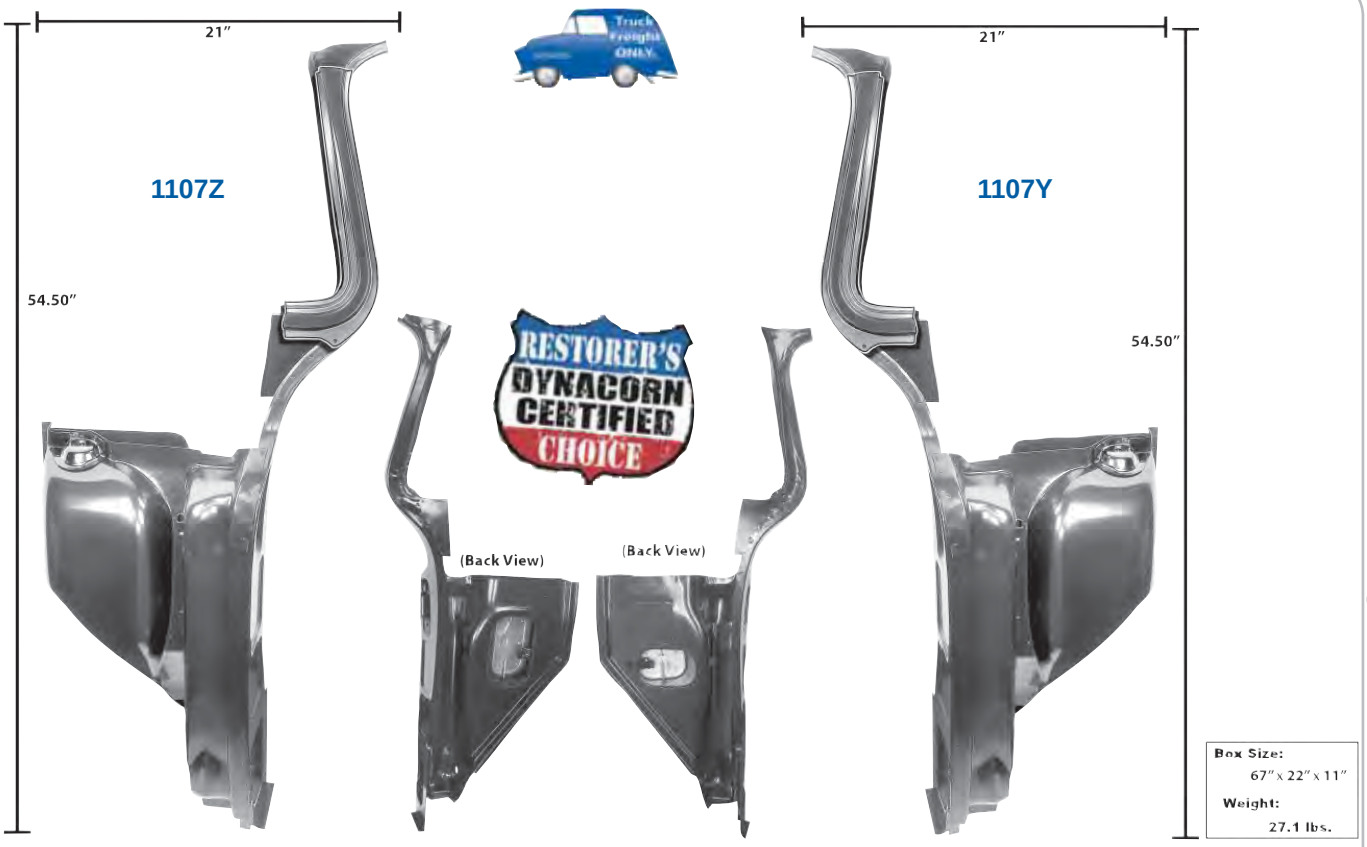

1107Y	New	1955-59	Kick Panel / "A" Pillar Assembly, RH	**$187.75 ea**
1107Z	New	1955-59	Kick Panel / "A" Pillar Assembly, LH	**$187.75 ea**

Firewalls

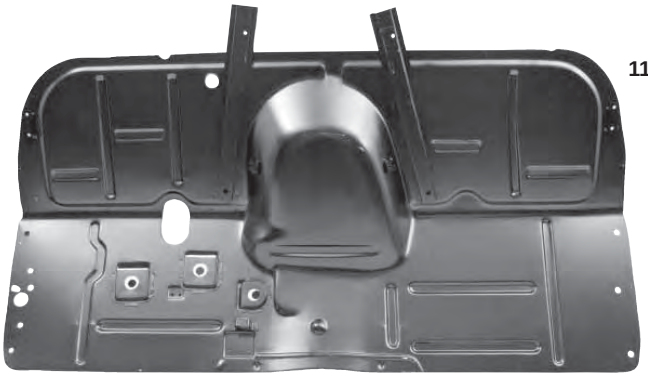

1106B	1947-54	Firewall	**$249.75 ea**
1106K	1955-59	Firewall	**$282.25 ea**

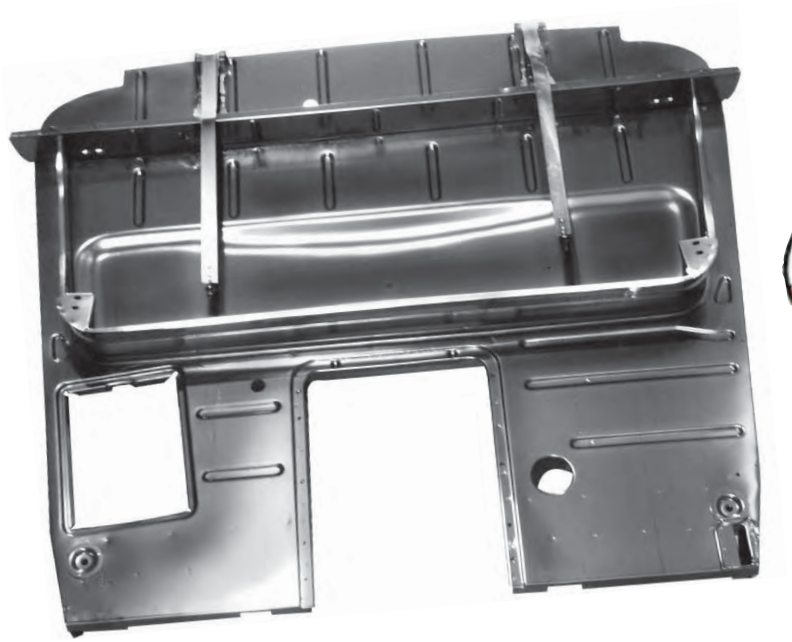

1106AX	1947-54	Complete Floor Pan	**$540.00 ea**

1106A	1947-54	Floor Pan	**$515.00 ea**
1106F	1947-54	Cab Floor Battery Cover	**$52.75 ea**
1106G	1947-53	Shift Cover for 3 Speed	**$52.75 ea**

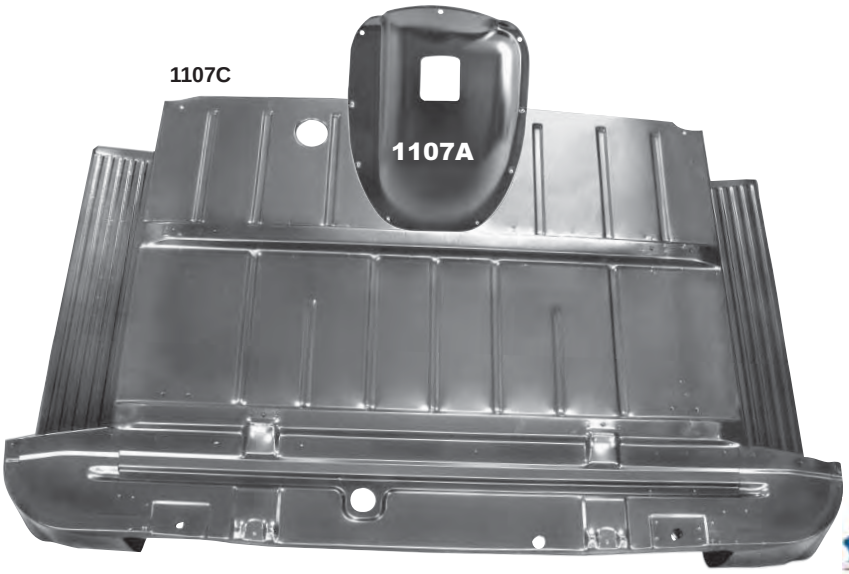

1107C	1955-58	Complete Floor Pan	**$625.00 ea**
1107A	1955-58	Cab Floor Shift Cover	**$43.50 ea**
1114K	1955-59	Transmission Cover, (3 sp. & Auto) Also fits GMC	**$43.50 ea**

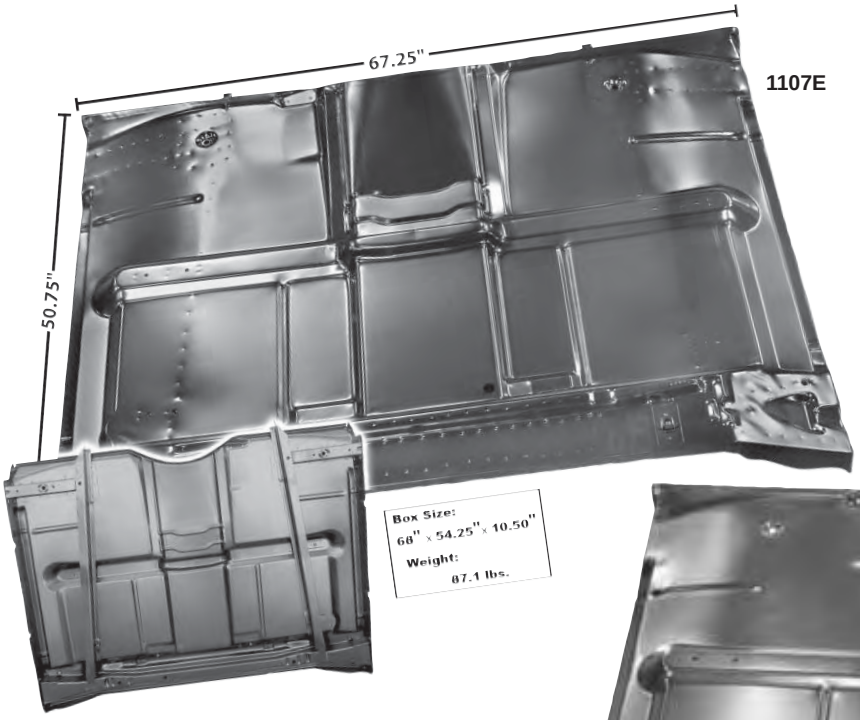

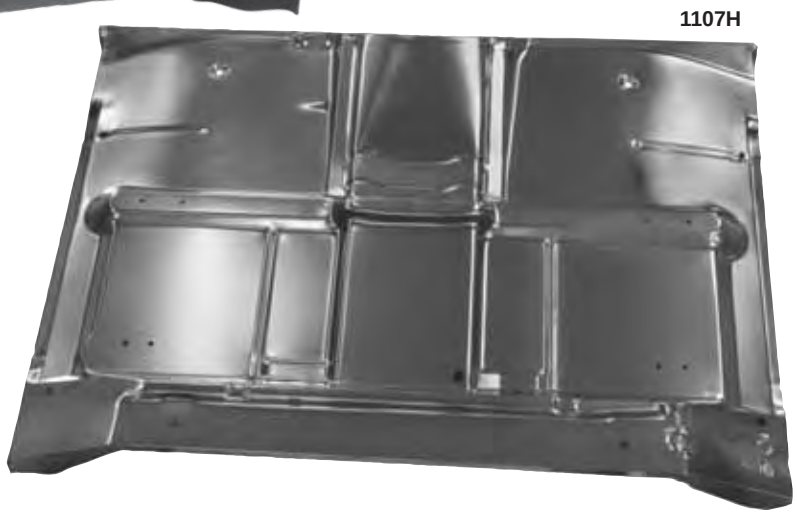

1107E	1968-72	Complete Cab Floor Pan, with brace, 8 ft. bed	**$498.25 ea**
1107H	1968-72	Complete Cab Floor Pan, without brace, 8 ft. bed	**$349.50 ea**

Rocker Panels

1104E	1947-55 1st Series	Rocker Panel RH
1104F	1947-55 1st Series	Rocker Panel LH

$44.75 ea

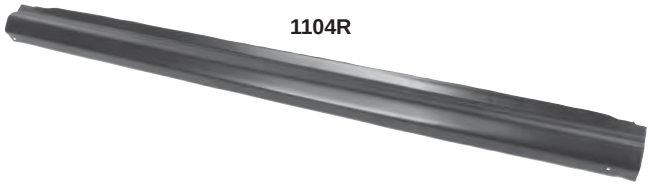

1104R	1955-59	Rocker Panel RH
1104S	1955-59	Rocker Panel LH

$25.75 ea

1104A	1960-66	Rocker Panel RH
1104B	1960-66	Rocker Panel LH

$35.50 ea

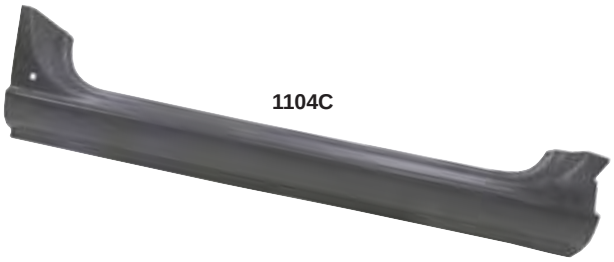

1104C	1967-72	Rocker Panel RH
1104D	1967-72	Rocker Panel LH

$20.00 ea

Rear License Panel Brackets

1109P	1954-59	Rear License Plate Bracket

$23.00 ea

1109Q	1960-66	Rear License Plate Bracket

$38.00 ea

1109B	1967-87	Rear License Panel

$21.75 ea

Gas Tanks

T50

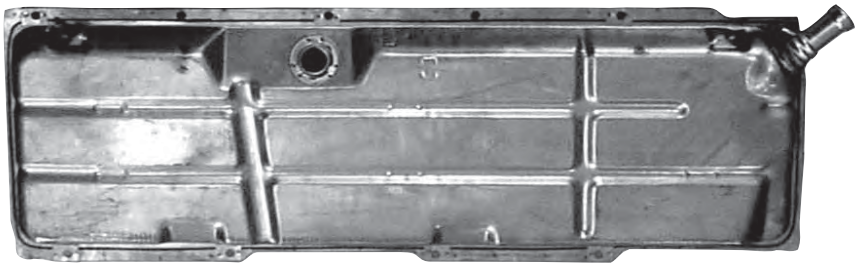

T54

T50	1949-54	Galvanized Gas Tank	**$171.50 ea**
T51	1955-59	Galvanized Gas Tank	**$171.50 ea**
T52	1960-66	Galvanized Gas Tank	**$187.75 ea**
T53	1967-72	Galvanized Gas Tank Without E.E.C.	**$187.75 ea**
T54	1970-72	Galvanized Gas Tank With E.E.C.	**$187.75 ea**

Tank Bracket/Strap

T60A	1947-54	Gas Tank Brackets W/Straps

$66.25 pr

Tank Filler Kits

T56

T56	1947-54	Gas Tank FIller Kit
T57	1955-59	Gas Tank FIller Kit

$46.00 kit

Fuel Senders

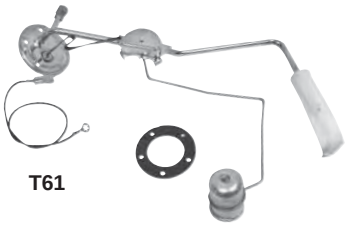

T61

T62

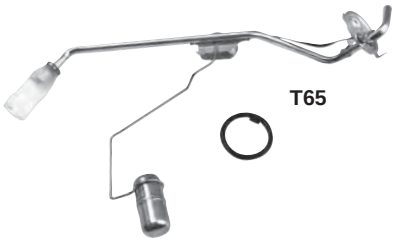

T65

T60	1947-59	Fuel Sender	**$28.50 ea**
T61	1960-66	Fuel Sender	**$28.50 ea**
T62	1969-72	Fuel Sender, Suburban/Blazer	**$28.50 ea**
T63	1967-71	Fuel Sender 6 cylinder	**$25.75 ea**
T64	1967-71	Fuel Sender 8 cylinder	**$25.75 ea**
T65	1972	Fuel Sender, Standard Transmission	**$25.75 ea**
T66	1972	Fuel Sender, Automatic Transmission	**$25.75 ea**

Complete Bed Floor Pans

1107J	New	1967-72	Complete Bed Floor Pan for **6** Foot Bed	***Coming Soon!***

1107K	New	1967-72	Complete Bed Floor Pan for **8** Foot Bed	***Coming Soon!***
1106AA	New	1967-72	Floor Panel Bolt Set	**$11.00 set**

1107W

1107U

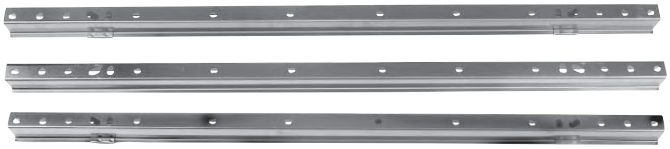

1107S

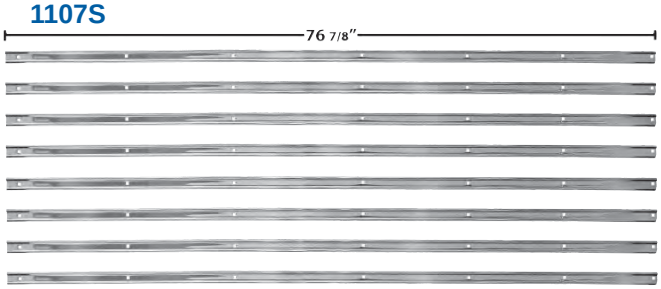

1107T

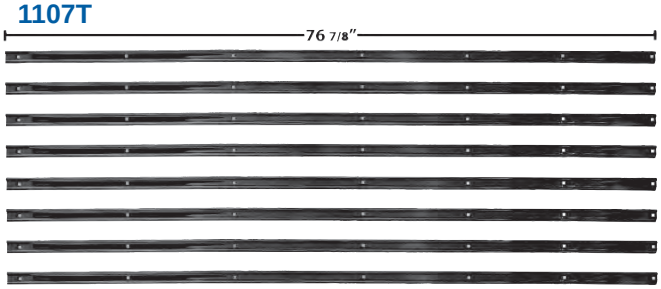

1160J

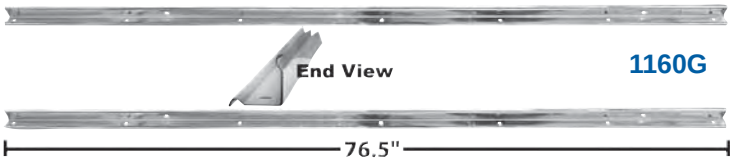

1160G

1107W	New	1947-54	Bed Rear Cross Rail Brace	$113.50 ea
1107U	New	1947-54	Floor/Bed Cross Braces, 3 pcs.	$100.00 set
1107S	New	1947-54	Floor/Bed Straight Braces, Stainless, 8 pcs.	$120.25 ea
1107T	New	1947-54	Floor/Bed Straight Braces, Painted, 8 pcs.	$48.75 ea
1160J	New	1947-54	Stepside Angle Strip, Painted, RH	$21.75 ea
1160K	New	1947-54	Stepside Angle Strip, Painted, LH	$21.75 ea
1160G	New	1947-54	Stepside Angle Strips, Chrome, 2 pcs.	$50.00 pr

1107L

1107R

1107M

1107Q

1107P

1107N

1107L	1967-72	Floor / Bed Front Cross Sill	$39.25 ea
1107R	1967-72	Floor / Bed Rear Cross Sill	$71.55 ea
1107M	1967-72	Floor / Bed Front Wheelhouse Cross Sill	$39.25 ea
1107Q	1967-72	Floor / Bed Rear Wheelhouse Cross Sill	$39.25 ea
1107N	1967-72	Floor / Bed Front Enforcement Bar Strip, Long	$25.75 ea
1107P	1967-72	Floor / Bed Rear Enforcement Bar Strip, Short	$17.75 ea

Bed Under-frames

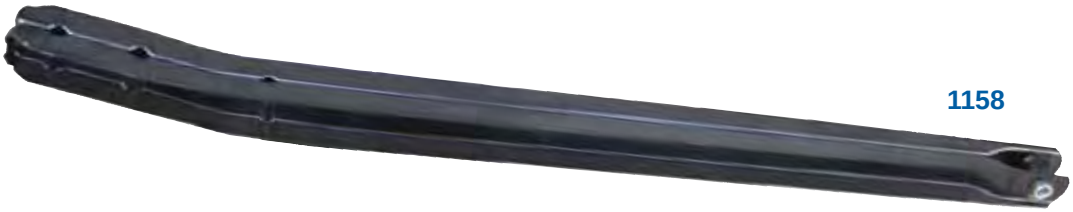

1158

1158A

1158	New	1967-72	Bed Under-frame, RH	$228.50 ea
1158A	New	1967-72	Bed Under-frame, LH	$228.50 ea

Front Bed Panels

1119A

1119B

1119C

1119A	1947-53	Front Bed Panel with 2 mm steel	$98.75 ea
1119B	1954-59	Front Bed Panel for Stepside	$81.00 ea
1119C	1958-59	Front Bed Panel for Fleetside	$120.25 ea

1119D

1119G

1119D	1960-66	Front Bed Panel for Fleetside	$128.25 ea
1119G	1960-72	Front Bed Panel Stepside	$81.00 ea

Fr. & R. Bed Panels, cont'd.

1180

1182

1119E

1119F

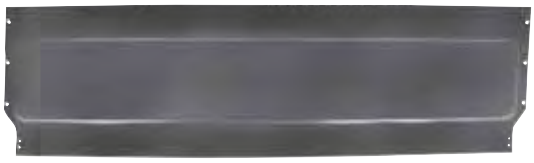

1119E	1967-72	Front Bed Panel Fleetside, Steel Floor	$127.00 ea
1119F	1967-72	Front Bed Panel Fleetside, Wood Floor	$127.00 ea
1180	1967-72	Front Lower Bed Panel, RH	$19.00 ea
1181	1967-72	Front Lower Bed Panel, LH	$19.00 ea
1182	1967-72	Lower Rear Bed Panel, RH	$19.00 ea
1183	1967-72	Lower Rear Bed Panel, LH	$19.00 ea

Bedside Panels

1160C

1160C		1947-53	Bedside for Shortbed, RH (Open Stake Pockets)	$309.50 ea
1160D		1947-53	Bedside for Shortbed, LH (Open Stake Pockets)	$309.50 ea
1119J	New	1955-59	Bed Panel for Shortbed, RH	*Coming Soon!*
1119K	New	1955-59	Bed Panel for Shortbed, LH	*Coming Soon!*

1160A

1160L	New	1967	6 Ft. Bedside for Fleetside, RH	*Coming Soon!*
1160M	New	1967	6 Ft. Bedside for Fleetside, LH	*Coming Soon!*
1160A		1968-72	6 Ft. Bedside for Fleetside, RH	$480.00 ea
1160B		1968-72	6 Ft. Bedside for Fleetside, LH	$480.00 ea
1160E	New	1967-72	8 Ft. Bedside for Fleetside, RH	*Coming Soon!*
1160F	New	1967-72	8 Ft. Bedside for Fleetside, LH	*Coming Soon!*

Door / Bed Steps

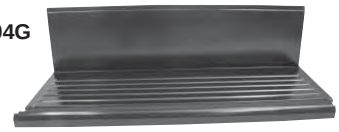
1104G

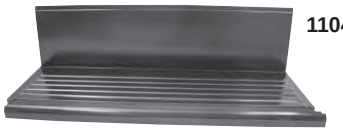
1104H

1104G	1955-59	Door Step W/Inner Rocker RH	$83.75 ea
1104H	1955-59	Door Step W/Inner Rocker LH	$83.75 ea

1104J

1104IC

1104K

1104LC

1104LF

1104I	1955-59	Bed Step for Longbed, Painted RH	$105.50 ea
1104J	1955-59	Bed Step for Longbed, Painted LH	$105.50 ea
1104IC	1955-59	Bed Step for Longbed, Chrome RH	$170.25 ea
1104JC	1955-59	Bed Step for Longbed, Chrome LH	$170.25 ea
1104K	1955-66	Bed Step for Shortbed, Painted RH	$101.25 ea
1104L	1955-66	Bed Step for Shortbed, Painted LH	$101.25 ea
1104KC	1955-66	Bed Step for Shortbed, Chrome RH	$195.75 ea
1104LC	1955-66	Bed Step for Shortbed, Chrome LH	$195.75 ea
1104LE	1967-72	Bed Step for Shortbed, Painted RH	$67.50 ea
1104LF	1967-72	Bed Step for Shortbed, Painted LH	$67.50 ea

1104T

1104Z

1113A

1113D

1104T	1955-59	Bed Step Hanger RH	$23.00 ea
1104U	1955-59	Bed Step Hanger LH	$23.00 ea
1104Y	1960-66	Bed Step Hanger RH	$17.75 ea
1104Z	1960-66	Bed Step Hanger LH	$17.75 ea
1113A	1973-87	Bed Step for Stepside RH	$46.00 ea
1113B	1973-87	Bed Step for Stepside LH	$46.00 ea
1113C	1973-87	Bed Step Hanger for Stepside RH	$23.00 ea
1113D	1973-87	Bed Step Hanger for Stepside LH	$23.00 ea

Running Boards

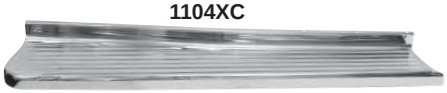
1104XC

1104W

1104WA

1104W	1947-54	Running Board, Painted, RH	$228.50 ea
1104X	1947-54	Running Board, Painted, LH	$228.50 ea
1104WC	1947-54	Running Board, Chrome, RH	$282.50 ea
1104XC	1947-54	Running Board, Chrome, LH	$282.50 ea
1104WA	1947-54	Running Board Bracket, 3 pcs., RH	$132.50 ea
1104XA	1947-54	Running Board Bracket, 3 pcs., LH	$132.50 ea

1161

1162

1161	1947-53	Tailgate, "Chevrolet"	**$162.00 ea**
1162	1947-53	Tailgate, "GMC"	**$195.75 ea**
1160X	1947-53	Tailgate with 2 mm steel, unmarked	**$147.25 ea**

1170

1172

1170	1954-87	Tailgate for Stepside, "Chevrolet"	**$222.75 ea**
1172	1954-87	Tailgate for Stepside, "GMC"	**$268.75 ea**
1171	1954-87	Tailgate for Stepside, unmarked	**$147.25 ea**

1167

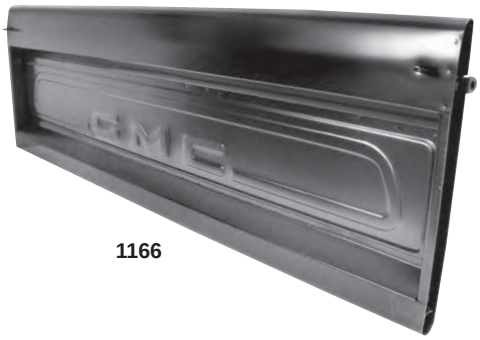

1166

1167	1958-66	Tailgate for Fleetside, "Chevrolet"	**$375.00 ea**
1166	1958-66	Tailgate for Fleetside, "GMC"	**$375.00 ea**
1165	1958-66	Tailgate for Fleetside, unmarked	**$335.00 ea**

1168

1169

1168	1967-72	Tailgate for Fleetside, "Chevrolet"	**$335.00 ea**
1175	1967-72	Tailgate for Fleetside, "GMC"	**$335.00 ea**
1169	1967-72	Tailgate for Fleetside, unmarked	**$209.25 ea**

Hinge Components

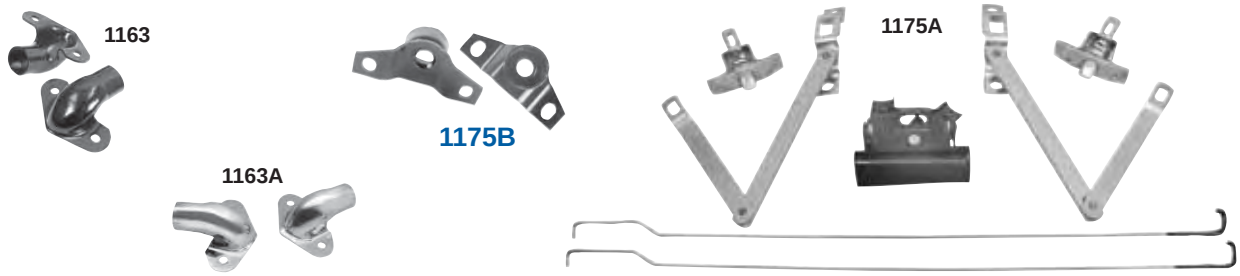

1163		1947-54	Tailgate Hinges	$23.00 pr
1163A		1947-54	Tailgate Hinges, Chrome	$38.00 pr
1175A		1967-72	Tailgate Hinge Assembly, 7 Pcs For Fleetside	$66.25 set
1175B	New	1967-72	Tailgate Hinge Trunnions	$29.75 pr

Inner Door Panels

1103CB	1955-59	Inner Door Panel RH	$66.25 ea
1103DB	1955-59	Inner Door Panel LH	$66.25 ea
1101G	1964-66	Inner Door Panel RH	$71.75 ea
1101H	1964-66	Inner Door Panel LH	$71.75 ea
1102A	1967-72	Inner Door Panels, Painted	$71.75 pr
1102AC	1967-72	Inner Door Panels, Chrome	$141.75 pr

Access Plates

1103CC	1955-59	Door Hinge Access Plates	$20.25 pr

Door Skins

1101Y	1967-72	Door Skin, Lower Half, RH	$17.50 ea
1101Z	1967-72	Door Skin, Lower Half, LH	

1102S	1947-50	Door Shell, RH	**$450.00 ea**
1102T	1947-50	Door Shell, LH	**$450.00 ea**
1102Y	1952-54	Door Shell, RH	**$450.00 ea**
1102Z	1952-54	Door Shell, LH	**$450.00 ea**
1103C	1955-59	Door Shell, RH	**$475.00 ea**
1103D	1955-59	Door Shell, LH	**$475.00 ea**
1103DC	1964-66	Door Shell, RH	**$500.00 ea**
1103DD	1964-66	Door Shell, LH	**$500.00 ea**

Truck Freight ONLY

1103

1103KB

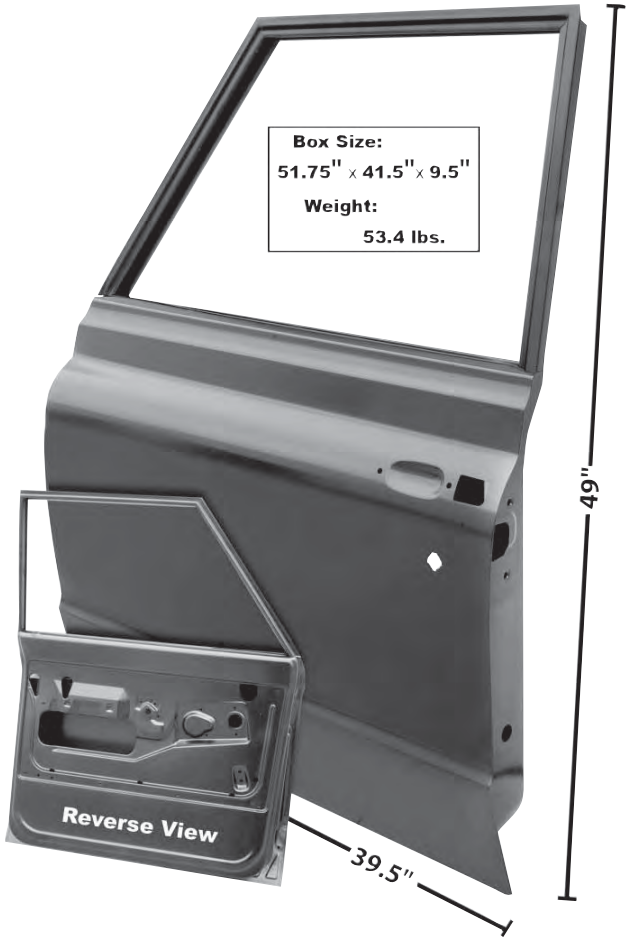

1103B

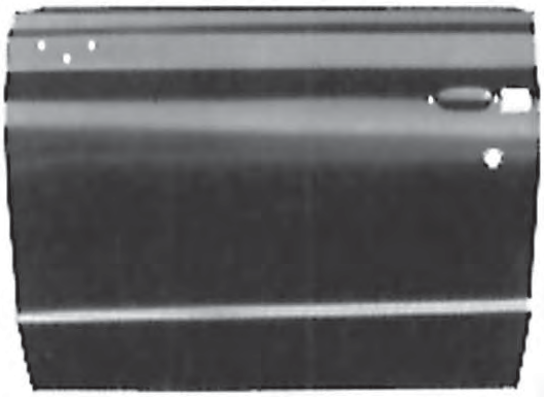

1102		1967-71	Door Shell, RH	**$320.00 ea**
1103		1967-71	Door Shell, LH	**$320.00 ea**
1103A		1972	Door Shell, RH	**$310.00 ea**
1103B		1972	Door Shell, LH	**$310.00 ea**
1103JB	New	1967-71	Door Shell, RH, Suburban	**$349.00 ea**
1103KB	New	1967-71	Door Shell, LH, Suburban	**$349.00 ea**
1103JC	New	1972	Door Shell, RH, Suburban	***Coming Soon!***
1103KC	New	1972	Door Shell, LH, Suburban	***Coming Soon!***

Door Window Frames & Trim

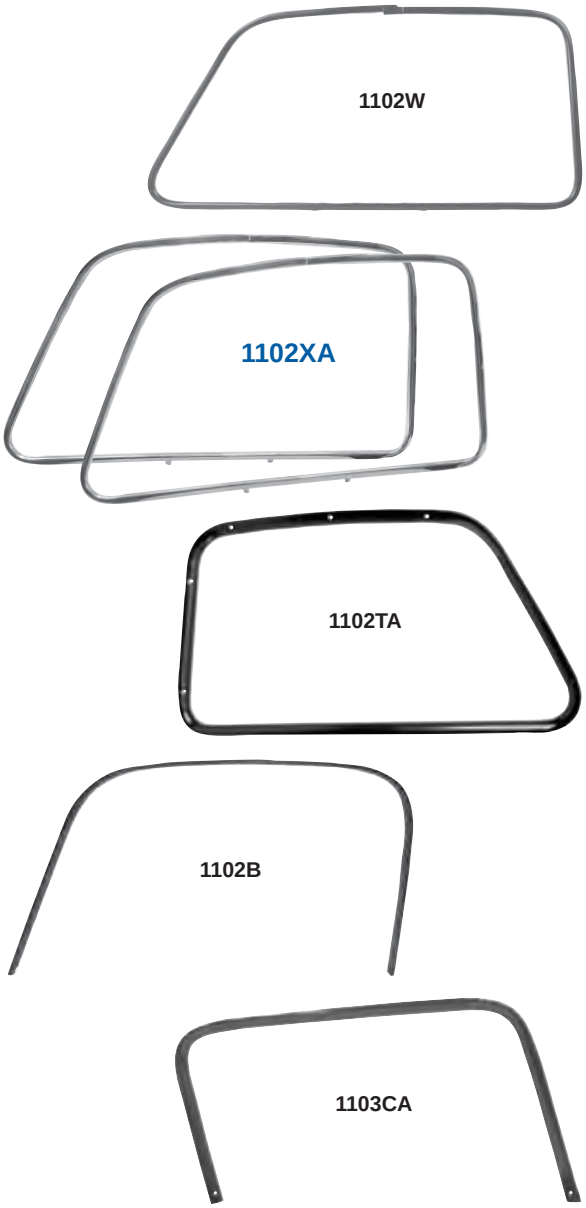

1102W		1947-50	Door Window Frame RH
1102X		1947-50	Door Window Frame LH
			$47.25 ea
1102XA	New	1947-54	Door Window Frames, Stainless
			$168.75 pr
1102SA		1947-50	Inner Door Window Frame RH
1102TA		1947-50	Inner Door Window Frame LH
			$74.25 ea
1102B		1947-54	Drip Rail/Door Crown Trim RH
1102C		1947-54	Drip Rail/Door Crown Trim LH
			$38.00 ea
1103CA		1955-59	Door Window Frame RH
1103DA		1955-59	Door Window Frame LH
			$33.75 ea

Window Frame W/Glass

1103XJ	1947-50	Door Window Frame W/Glass, Chrome RH
1103XK	1947-50	Door Window Frame W/Glass, Chrome LH
		$141.75 ea
1103XE	1947-50	Door Window Frame W/Glass, Painted RH
1103XF	1947-50	Door Window Frame W/Glass, Painted LH
		Coming Soon!

1103CD	1955-59	Door Window Frame W/Glass Chrome RH
1103CE	1955-59	Door Window Frame W/Glass Chrome LH
		$112.25 ea
1103CF	1955-59	Door Window Frame W/Glass Painted RH
1103CG	1955-59	Door Window Frame W/Glass Painted LH
		$86.50 ea

Door Window Glass

1103XH

1103XS

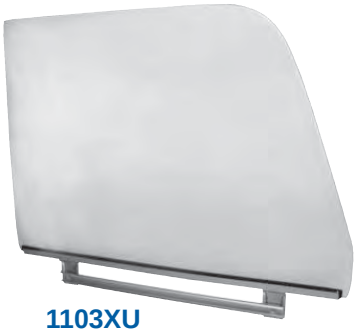
1103XU

1103XG	1951-54	Door Window Glass W/Lower Frame RH	$71.75 ea
1103XH	1951-54	Door Window Glass W/Lower Frame LH	$71.75 ea
1103XR	1960-63	Door Window Glass Assembly RH	$87.75 ea
1103XS	1960-63	Door Window Glass Assembly LH	$87.75 ea
1103XT	1964-66	Door Window Glass Assembly RH	$87.75 ea
1103XU	1964-66	Door Window Glass Assembly LH	$87.75 ea

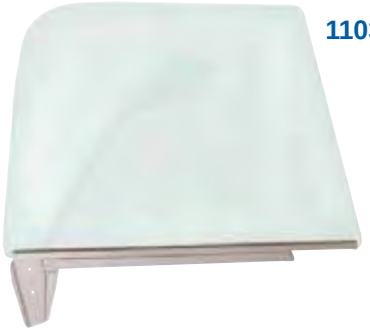
1103BA

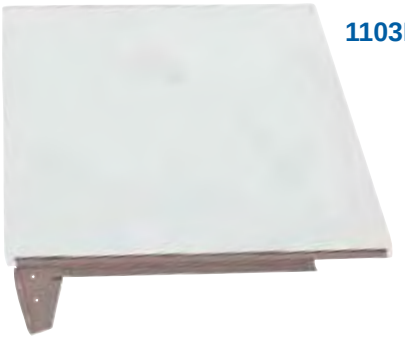
1103BC

1103BA	New	1967-72	Door Window Glass With Lower Frame RH For Pickup	$106.50 ea
1103BB	New	1967-72	Door Window Glass With Lower Frame LH For Pickup	$106.50 ea
1103BC	New	1967-72	Door Window Glass W/Lower Frame RH For Suburban	$121.50 ea
1103BD	New	1967-72	Door Window Glass W/Lower Frame LH For Suburban	$121.50 ea

Door Glass Tracks

1103DF

1102AE

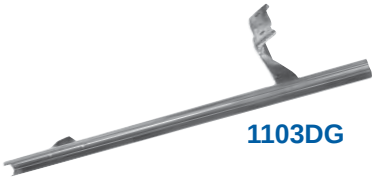
1103DG

1103DF		1951-54	Door Window Glass Track	$31.25 ea
1103DG	New	1967-72	Door Window Run Channel, RH	$43.50 ea
1103DH	New	1967-72	Door Window Run Channel, LH	$43.50 ea
1102AD	New	1967-72	Door Window Glass Track, RH	$60.75 ea
1102AE	New	1967-72	Door Window Glass Track, LH	$60.75 ea

1103WB		1951-54	Vent Window Assy. W/Glass Chrome RH	$285.00 ea
1103WC		1951-54	Vent Window Assy. W/Glass Chrome LH	$285.00 ea
1103WD		1951-54	Vent Window Assy. W/Glass Painted RH	$249.75 ea
1103WE		1951-54	Vent Window Assy. W/Glass Painted LH	$249.75 ea
1103XA		1955-59	Vent Window Assy. W/Glass Chrome RH	$285.00 ea
1103XB		1955-59	Vent Window Assy. W/Glass Chrome LH	$285.00 ea
1103XP	New	1960-63	Vent Window Assy. W/Glass Chrome RH	*Coming Soon!*
1103XQ	New	1960-63	Vent Window Assy. W/Glass Chrome LH	*Coming Soon!*
1103XL		1964-66	Vent Window Assy. W/Glass RH	$255.00 ea
1103XM		1964-66	Vent Window Assy. W/Glass LH	$255.00 ea
1104M		1968-72	Vent Window Assy. W/Tinted Glass RH	$249.75 ea
1104N		1968-72	Vent Window Assy. W/Tinted Glass LH	$249.75 ea
1104P		1968-72	Vent Window Assy. W/Clear Glass RH	$249.75 ea
1104Q		1968-72	Vent Window Assy. W/Clear Glass LH	$249.75 ea

Vent Window

1103XC	1951-54	Vent Window RH
1103XD	1951-54	Vent Window LH

$75.75 ea

Vent Window Frames

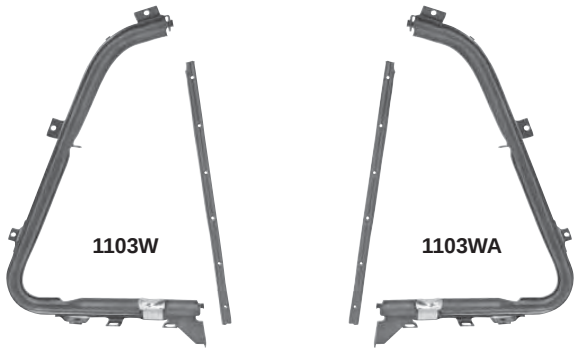

1103W	1951-54	Vent Window Frame with Seals, RH
1103WA	1951-54	Vent Window Frame with Seals, LH

$106.50 ea

Guide Rail

Now sold in pairs!

1103DE	1955-59	Door Upper Guide Rails for Regulator

$43.50 pr

Trim Channel

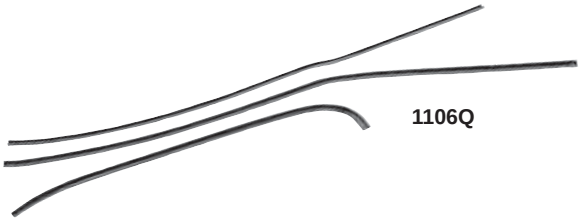

1106Q	1947-54	Door Trim Channels, RH 3 Pcs
1106R	1947-54	Door Trim Channels, LH 3 Pcs

$59.50 kit

Window Regulators

1115T	1947-50	Manual Regulator, RH	**$60.75 ea**
1115U	1947-50	Manual Regulator, LH	**$60.75 ea**
1115W	1951-55	Manual Regulator, RH	**$60.75 ea**
1115X	1951-55	Manual Regulator, LH	**$60.75 ea**
1115C	1955-59	Manual Regulator, RH	**$60.75 ea**
1115D	1955-59	Manual Regulator, LH	**$60.75 ea**
1115A	1960-63	Manual Regulator, RH	**$67.50 ea**
1115B	1960-63	Manual Regulator, LH	**$67.50 ea**

Window Regulators, cont'd.

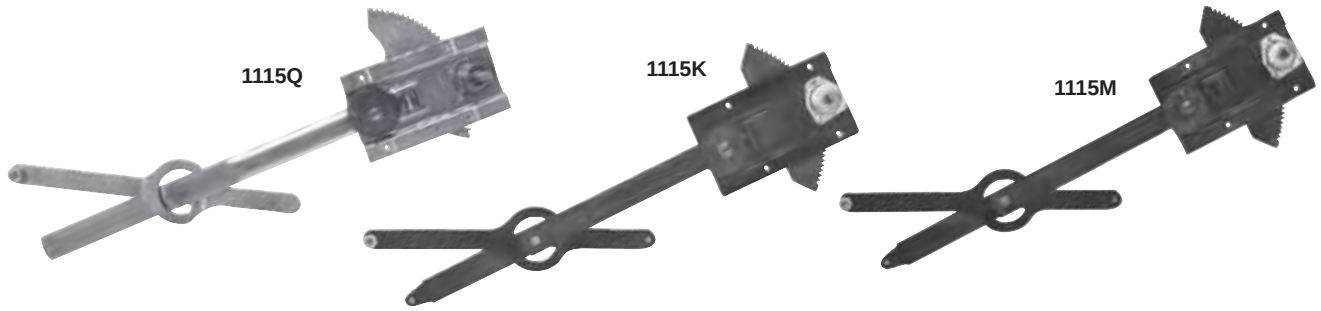

1115P	1964-66	Manual Regulator, RH	$39.25 ea
1115Q	1964-66	Manual Regulator, LH	$39.25 ea
1115J	1967-71	Manual Regulator, RH	$25.75 ea
1115K	1967-71	Manual Regulator, LH	$25.75 ea
1115L	1972	Manual Regulator, RH	$25.75 ea
1115M	1972	Manual Regulator, LH	$25.75 ea

Exterior Door Handles

1132	1947-51	Exterior Door Handles

$50.00 pr

1133	1952-59	Exterior Door Handles
1134	1960-66	Exterior Door Handles

$40.00 pr

1134A	1967-72	Exterior Door Handles
1134B	1973-80	Exterior Door Handles

$43.50 pr

Interior Door Handles & Window Cranks

1130	1947-66	Interior Door Handle

$8.75 ea

1130A	1967-72	Interior Door Handle

$5.50 ea

1131	1947-66	Window Crank Handle

$8.75 ea

M1037A	1967-76	Window Crank Handle, Black Knob

$5.50 ea

M1037B	1967-76	Window Crank Handle, Clear Knob

$5.50 ea

Handle Washer

1134C	New	1967-72	Door Handle Trim Washer, Black

$3.00 ea

Door Hinges

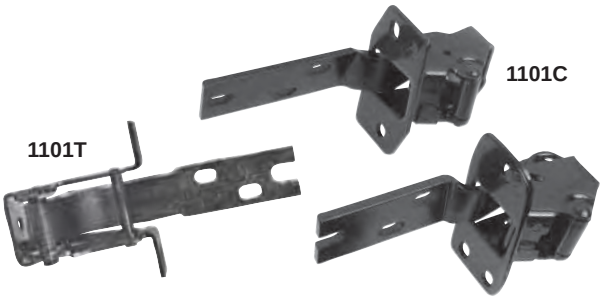

1101C	1947-54	Door Hinges, Upper/Lower RH
1101D	1947-54	Door Hinges, Upper/Lower LH

$130.75 ea

1101T	1955-59	Door Hinge, Upper RH=LH
1101U	1955-59	Door Hinge, Lower RH=LH

$48.75 ea

1101V	1960-66	Door Hinges, Upper/Lower RH
1101W	1960-66	Door Hinges, Upper/Lower LH

$93.25 ea

1102D	1967-72	Door Hinge, Upper RH
1102E	1967-72	Door Hinge, Upper LH
1102F	1967-72	Door Hinge, Lower RH
1102G	1967-72	Door Hinge, Lower LH

$40.50 ea

Vent Window Handle

1130E	1951-55	Vent Window Handles
1130F	1955-59	Vent Window Handles
1130G	1960-67	Vent Window Handles
1130H	1968-72	Vent Window Handles

$17.75 pr

Door Latch, Rod & Remote Kits

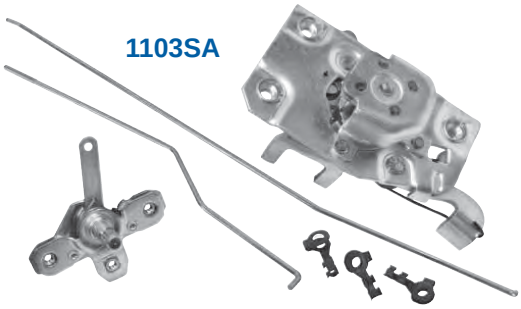

1103SA	New	1967-71	Door Latch w/Rods & Remote RH
1103SB	New	1967-71	Door Latch w/Rods & Remote LH

$70.25 ea

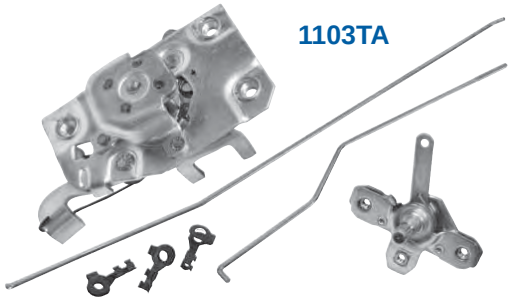

1103TA	New	1972	Door Latch w/Rods & Remote RH
1103TB	New	1972	Door Latch w/Rods & Remote LH

$70.25 ea

Door Latches

1103L

1103Z

1103L	1947-51	Door Latch RH
1103M	1947-51	Door Latch LH

$29.75 ea

1103Y	1952-54	Door Latch RH
1103Z	1952-54	Door Latch LH

$32.50 ea

1102XB	New	1947-54	Door Latch Striker

Coming Soon!

18RH

1103P

18RH	1955-59	Door Latch RH
18LH	1955-59	Door Latch LH

$30.00 ea

1103N	1960-63	Door Latch RH
1103P	1960-63	Door Latch LH

$60.75 ea

1103Q

1103T

1103Q	1964-66	Door Latch RH
1103R	1964-66	Door Latch LH

$48.75 ea

1103S	1967-72	Door Latch RH
1103T	1967-72	Door Latch LH

$40.00 ea

Door Relays

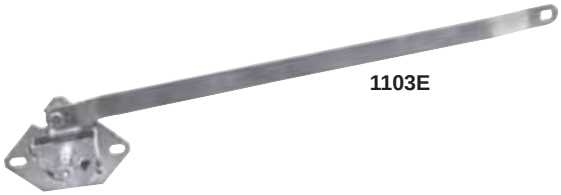
1103E

1103E	1947-54	Door Relay RH
1103F	1947-54	Door Relay LH

$20.25 ea

1103H

1103G	1955-59	Door Relay RH
1103H	1955-59	Door Relay LH

$20.25 ea

1103IA

1103IA	1960-63	Door Relay RH	**$16.50 ea**
1103IB	1960-63	Door Relay LH	**$16.50 ea**

1103IC

1103IC	1964-66	Door Relay RH	**$16.50 ea**
1103ID	1964-66	Door Relay LH	**$16.50 ea**

1115Y

1103IF

1103IG

1115Y	New	1947-54	Door Handle Relay RH
1115Z	New	1947-54	Door Handle Relay LH

Coming Soon

1103IE	1967-71	Door Relay RH	**$13.50 ea**
1103IF	1967-71	Door Relay LH	**$13.50 ea**

1103IG	1972	Door Relay RH	**$13.50 ea**
1103IH	1972	Door Relay LH	**$13.50 ea**

Door Lock Knob

M1770	1967-91	Door Lock Knobs

$3.00 pr

Door Jamb Vent

1485H	1971-72	Door Jamb Vent

$13.50 ea

Door Molding

M1212	1969-72	Upper Door Molding Black W/Clips RH
M1213	1969-72	Upper Door Molding Black W/Clips LH

$33.75 ea

M1230	1969-72	Lower Door Molding, Black W/Clips RH
M1231	1969-72	Lower Door Molding, Black W/Clips LH

$33.75 ea

M1232	1969-72	Lower Door Molding, Wood W/Clips RH
M1233	1969-72	Lower Door Molding, Wood W/Clips LH

$44.50 ea

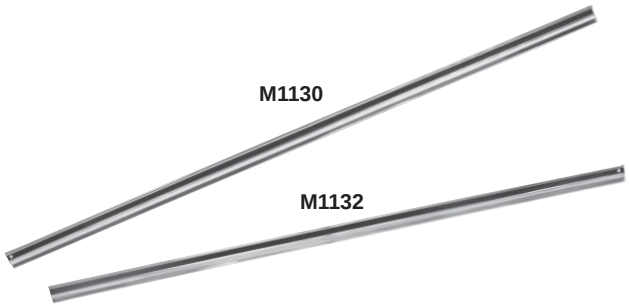

M1130	1973-80	Upper Door Molding Front RH
M1131	1973-80	Upper Door Molding Front LH

$12.25 ea

M1132	1973-80	Lower Door Molding Front RH
M1133	1973-80	Lower Door Molding Front LH

$12.25 ea

Door Edge Guards

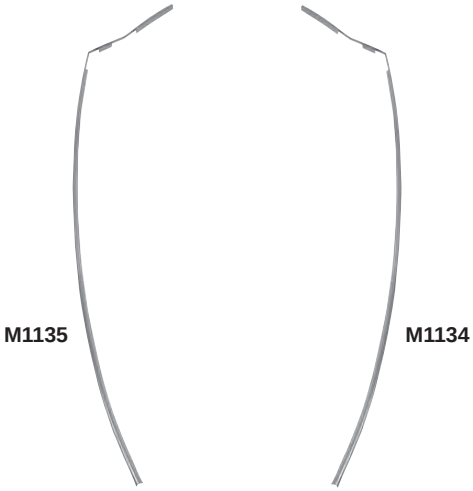

M1134	1973-83	Door Edge Guard Front RH	**$8.50 ea**
M1135	1973-83	Door Edge Guard Front LH	**$8.50 ea**

Door Glass Channels

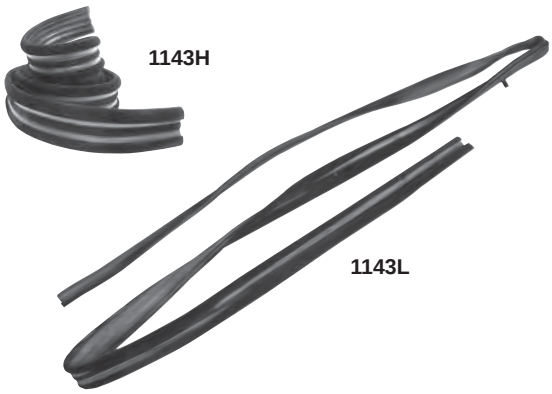

1143H	1973-80	Front Door Glass Channel Sash

$14.75 ea

1143L	1981-91	Door Glass Channel Run Front RH
1143M	1981-91	Door Glass Channel Run Front LH

$14.75 ea

Door Weatherstripping

1143B	1973-80	Top Weatherstrip Front RH	$13.50 ea
1143C	1973-80	Top Weatherstrip Front LH	$13.50 ea
1143D	1973-80	Inner Weatherstrip Front RH	$13.50 ea
1143E	1973-80	Inner Weatherstrip Front LH	$13.50 ea
1143A	1973-91	Weatherstrip On Cab	$20.25 ea
1143F	1973-87	Outer Weatherstrip Front RH (Also fits 1973-91 Blazer)	$13.50 ea
1143G	1973-87	Outer Weatherstrip Front LH (Also fits 1973-91 Blazer)	$13.50 ea
1143P	1981-92	Inner Weatherstrip Front RH	$13.50 ea
1143Q	1981-92	Inner Weatherstrip Front LH	$13.50 ea

Arm Rest Bases

1130B	New	1967-72	Arm Rest Bases, pair	*Coming Soon!*

Grilles & Components

GMC

M1137F		1947-54	Chrome Grille Assembly For GMC	$550.00 ea
1121F		1947-54	Grille Support Frame, Chrome For GMC	$309.25 ea
1121G	New	1947-54	Grille Support Frame, Painted For GMC	*Coming Soon!*
LH10		1947-54	Headlamp Bucket with Retainer Ring	$48.75 ea
1115I		1947-55	Headlamp Bezels	$25.75 pr

Chevy

M1137A	1947-53	Chrome Grille Assembly	$475.00 ea
M1138	1947-53	Black Grille Assembly	$325.00 ea
LH10	1947-54	Headlamp Bucket with Retainer Ring	$48.75 ea
1115I	1947-55	Headlamp Bezels	$25.75 pr

Chevy

M1137B		1954-55 1st Series	Chrome Grille Assembly	$725.00 ea
M1137C	New	1954-55 1st Series	Black Grille Assembly	*Coming Soon!*
M1137D		1954-55 1st Series	Chrome Grille Nose Bar	$87.75 ea
M1137E	New	1954-55 1st Series	Black Grille Nose Bar	$67.50 ea

GMC

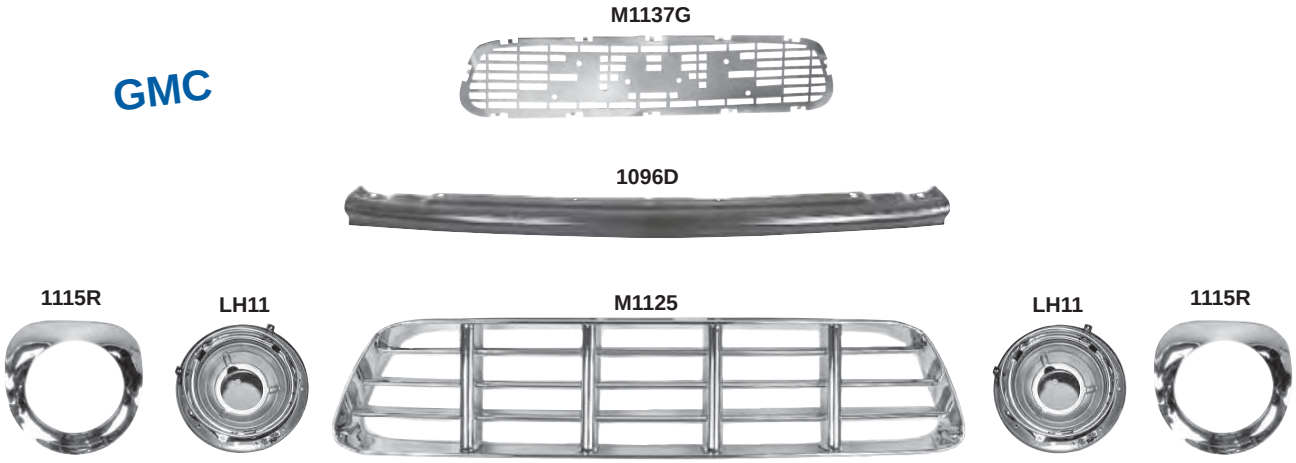

M1137G	1955	Hood Ornament Grille, For GMC	$155.25 ea
M1125	1955-56	Chrome Grille	$322.75 ea
LH11	1955-57	Headlamp Bucket with Retainer Ring	$48.75 ea
1115R	1955-57	Chrome Headlamp Bezels with Seals	$81.00 pr
1096D	1955-56	Upper Grille Bar, Chevy Only	$54.00 ea

Chevy

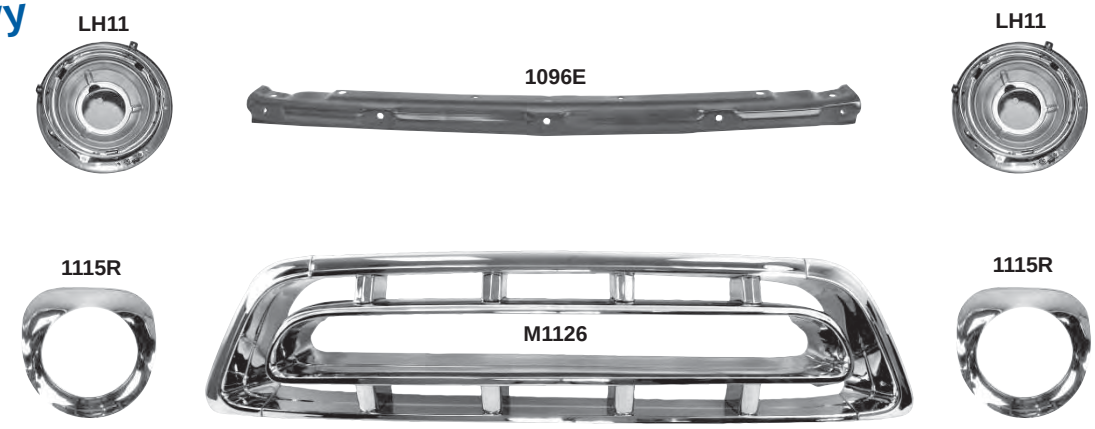

M1126	1957	Chrome Grille	**$650.00 ea**
LH11	1955-57	Headlamp Bucket with Retainer Ring	**$48.75 ea**
1115R	1955-57	Chrome Headlamp Bezels with Seals	**$81.00 pr**
1096E	1957	Upper Grille Bar, Chevy	**$54.00 ea**

Chevy

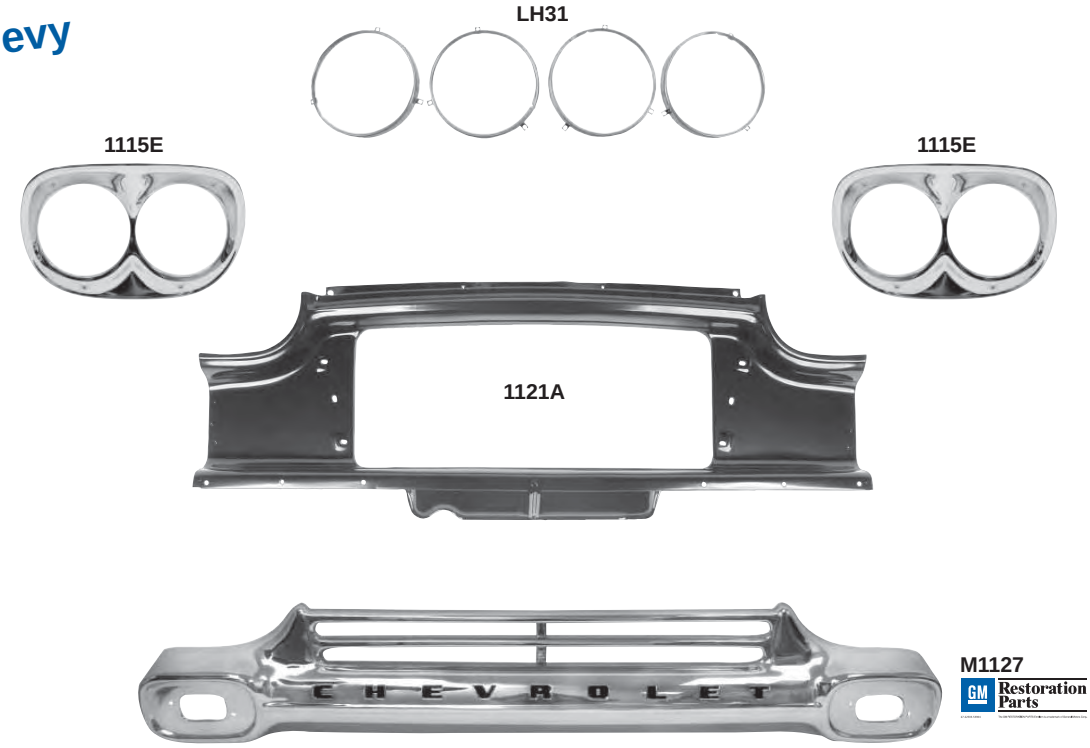

M1127	1958-59	Chrome Grille, “Chevrolet”	**$322.75 ea**
1115E	1958-59	Chrome Headlamp Bezels	**$81.00 pr**
1121A	1958-59	Grille Support Panel	**$187.50 ea**
LH31	1958-61	Headlamp Retaining Rings, 4 pcs. Chevy	**$16.25 set**

Chevy

1121B		1960-61	Grille Support Panel	**$295.75 ea**
1115EA	New	1960-61	Headlamp Bezels, Pair Chrome	***Coming Soon!***
LH13		1960-61	Headlamp Bucket	**$46.00 ea**
LH31		1958-61	Headlamp Retaining Rings, 4 pcs. Chevy	**$16.25 set**

Chevy

1121C		1962	Grille Support Panel	**$330.00 ea**
1121D		1963	Grille Support Panel	**$330.00 ea**
1115S		1963	Chrome Headlamp Bezels	**$54.00 pr**
M1016		1962-78	Headlamp Retainer Ring, Chevy	**$5.50 ea**

Chevy

M1129 GM Restoration Parts

M1129		1964-66	Chrome Grille, “Chevrolet”	**$318.75 ea**
1121E		1964-66	Grille Support Panel	**$330.75 ea**
1115F		1964-66	Chrome Headlamp Bezels	**$40.50 pr**
M1016		1962-78	Headlamp Retainer Ring, Chevy	**$5.50 ea**

GMC

M1275

LH20

M1275		1967	Grille, GMC	$438.75 ea
1121H	New	1967-68	Grille Support Panel, GMC	*Coming Soon!*
LH20		1958-72	Headlamp Buckets & Rings, 8 pcs. GMC	$89.00 set

M1272

1115G

M1274

M1274

1115G

M1273

Chevy

M1016

M1138C

1121J

M1274		1967-68	Grille Surround with 14 clips, (2 per truck) Chevy	$60.75 ea
M1138C		1967-68	Grille Vertical Support, Chevy	$23.00 ea
1121J		1967-68	Grille Support Panel, Chevy	$322.75 ea
1115G		1967-68	Headlamp Bezels, Chevy	$62.25 pr
M1016		1962-78	Headlamp Retainer Ring, Chevy	$5.50 ea
M1272		1967-68	Eyebrow Molding, RH	$20.25 ea
M1273		1967-68	Eyebrow Molding, LH	$20.25 ea

Chevy

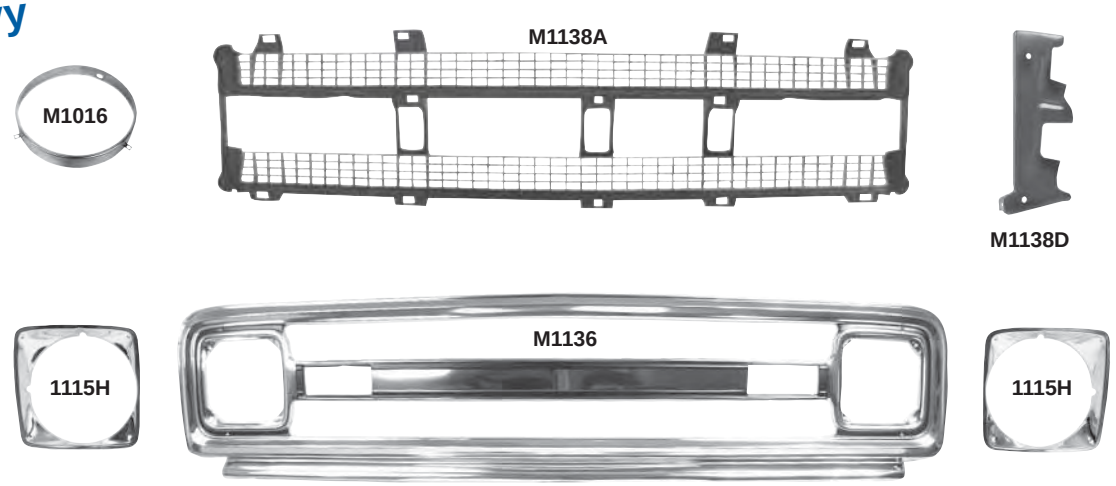

M1136	1969-70	Chrome Grille Shell with Center Bar, Chevy	$315.00 ea
M1138A	1969-70	Grille Insert	$91.75 ea
M1138D	1969-72	Grille Vertical Support	$24.50 ea
1115H	1969-72	Headlamp Bezels, Chevy	$36.50 pr
M1016	1962-78	Headlamp Retainer Ring, Chevy	$5.50 ea

GMC

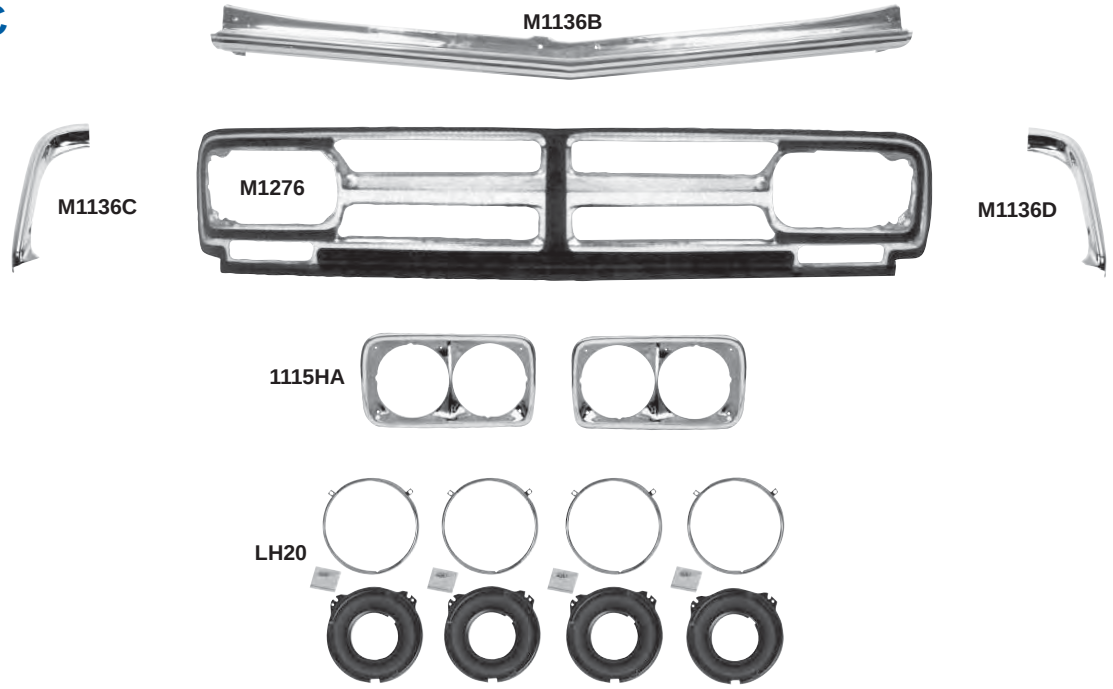

M1136B	1969-72	Grille Top Bar Molding, GMC	$135.00 ea
M1276	1968-70	Grille, Chrome, GMC	$390.00 ea
1115HA	1969-72	Headlamp Bezels, GMC	$114.75 pr
LH20	1958-72	Headlamp Buckets & Rings, 8 pc., GMC	$89.25 set
M1136C	1969-72	Front Fender Molding, RH GMC	$54.00 ea
M1136D	1969-72	Front Fender Molding, LH GMC	$54.00 ea

GMC

M1136A	1971-72	Chrome Grille, GMC	**$390.00 ea**
M1136B	1969-72	Grille Top Bar Molding, GMC	**$135.00 ea**
LH20	1958-72	Headlamp Buckets & Rings, 8 pc. GMC	**$89.25 set**

Chevy

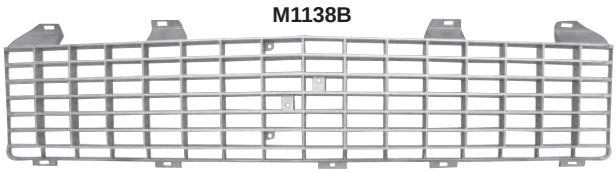

M1137	1971-72	Chrome Grille Shell without Center Bar	**$309.25 ea**
M1138B	1971-72	Grille Insert	**$97.25 ea**
1115H	1969-72	Headlamp Bezels, Chevy	**$36.50 pr**
M1016	1962-78	Headlamp Retainer Ring, Chevy	**$5.50 ea**

Grille Moldings

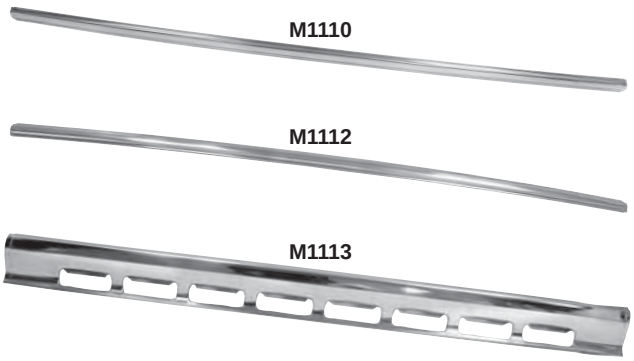

M1110	1973-78	Upper Grille Molding	$8.25 ea
M1111	1973-78	Lower Grille Molding	$8.25 ea
M1112	1979-80	Upper Grille Molding	$11.00 ea
M1113	1979-80	Lower Grille Molding	$16.25 ea

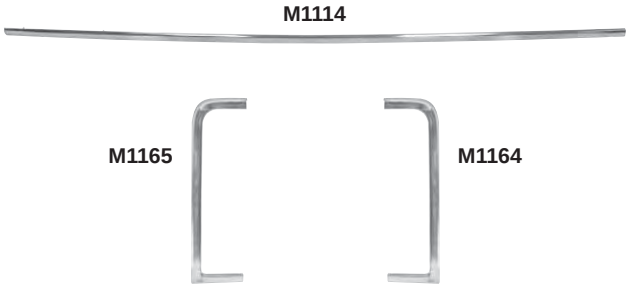

M1114	1981-82	Upper Grille Molding	$16.25 ea
M1115	1981-82	Lower Grille Molding	$16.25 ea
M1164	1981-82	Side Grille Molding RH	$16.25 ea
M1165	1981-82	Side Grille Molding LH	$16.25 ea
M1116	1983-88	Upper Grille Molding	$10.75 ea
M1117	1983-88	Lower Grille Molding	$10.75 ea
M1166	1983-87	Side Grille Molding RH	$15.00 ea
M1167	1983-87	Side Grille Molding LH	$15.00 ea

Hood Moldings

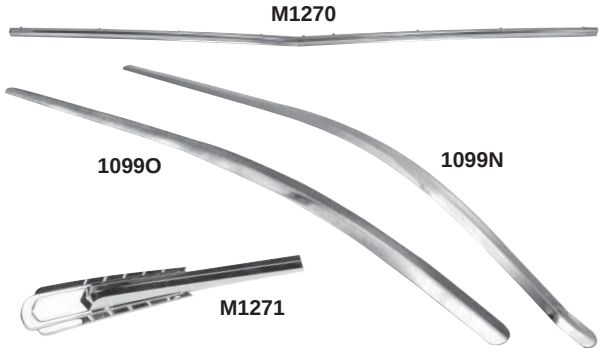

M1271	1947-52	Hood Ornament	$100.00 ea
1099N	1947-54	Hood Center Molding, Chevrolet	$74.25 ea
1099O	1947-54	Hood Center Molding, GMC	$48.75 ea
M1270	1967-68	Hood Molding, GMC	$46.00 ea

Antennas

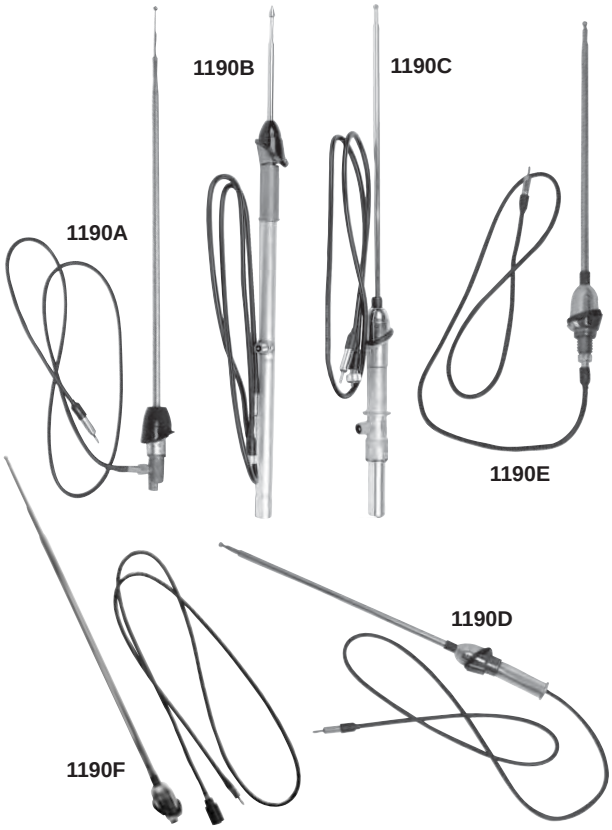

1190A	1947-55 1st Series	Antenna	$74.25 ea
1190B	1955-59	Antenna	$54.00 ea
1190C	1960-62	Antenna	$67.50 ea
1190D	1963	Antenna	$67.50 ea
1190E	1964-66	Antenna	$40.50 ea
1190F	1967-72	Antenna	$44.50 ea

M1100	1973-80	Wheel Opening Molding, Front RH	$10.00 ea
M1101	1973-80	Wheel Opening Molding, Front LH	$10.00 ea
M1104	1973-87	Wheel Opening Molding, Rear RH	$10.00 ea
M1105	1973-87	Wheel Opening Molding, Rear LH	$10.00 ea
M1102	1981-87	Wheel Opening Molding, Front RH	$10.00 ea
M1103	1981-87	Wheel Opening Molding, Front LH	$10.00 ea

M1106	1988-91	Wheel Opening Molding, Aluminum,Front RH Also Yukon and 1988-89 &1992-97 Blazer	$13.50 ea
M1107	1988-91	Wheel Opening Molding, Aluminum,Front LH Also Yukon and 1988-89 &1992-97 Blazer	$13.50 ea
M1108	1988-91	Wheel Opening Molding, Aluminum,Rear RH Also Yukon and 1988-89 &1992-97 Blazer	$13.50 ea
M1109	1988-91	Wheel Opening Molding, Aluminum,Rear LH Also Yukon and 1988-89 &1992-97 Blazer	$13.50 ea

M1140	1988-97	Wheel Opening Molding, Chrome, Front RH Also Yukon and 1988-89 &1992-97 Blazer	$6.75 ea
M1141	1988-97	Wheel Opening Molding, Chrome, Front LH Also Yukon and 1988-89 &1992-97 Blazer	$6.75 ea
M1142	1988-97	Wheel Opening Molding, Chrome, Rear RH Also Yukon and 1988-89 &1992-97 Blazer	$6.75 ea
M1143	1988-97	Wheel Opening Molding, Chrome, Rear LH Also Yukon and 1988-89 &1992-97 Blazer	$6.75 ea

M1144	1988-97	Wheel Opening Molding, Black, Front RH Also Yukon and 1988-89 &1992-97 Blazer	$6.75 ea
M1145	1988-97	Wheel Opening Molding, Black, Front LH Also Yukon and 1988-89 &1992-97 Blazer	$6.75 ea
M1146	1988-97	Wheel Opening Molding, Black, Rear RH Also Yukon and 1988-89 &1992-97 Blazer	$6.75 ea
M1147	1988-97	Wheel Opening Molding, Black, Rear LH Also Yukon and 1988-89 &1992-97 Blazer	$6.75 ea

Fender Moldings

M1220

M1221

M1224

M1225

M1220	1969-72	Lower Front Fender Molding W/Clips, RH Black	**$20.25 ea**
M1221	1969-72	Lower Front Fender Molding W/Clips, LH Black	**$20.25 ea**
M1224	1969-72	Lower Rear Fender Molding W/Clips, RH Black	**$23.00 ea**
M1225	1969-72	Lower Rear Fender Molding W/Clips, LH Black	**$23.00 ea**

M1222

M1223

M1226

M1227

M1222	1969-72	Lower Front Fender Molding W/Clips, RH Woodgrain	**$24.50 ea**
M1223	1969-72	Lower Front Fender Molding W/Clips, LH Woodgrain	**$24.50 ea**
M1226	1969-72	Lower Rear Fender Molding W/Clips, RH Woodgrain	**$23.00 ea**
M1227	1969-72	Lower Rear Fender Molding W/Clips, LH Woodgrain	**$23.00 ea**

M1210

M1121

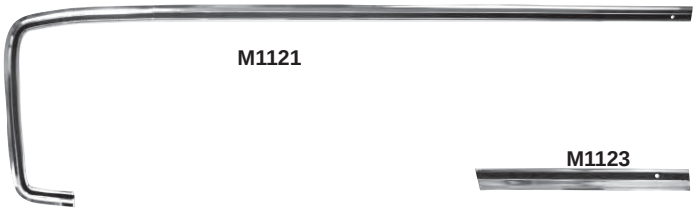

M1123

M1210	1969-72	Side Fender Molding With Clips, RH or LH	**$43.25 ea**
M1120	1973-80	Upper Fender Molding RH	**$21.75 ea**
M1121	1973-80	Upper Fender Molding LH	**$21.75 ea**
M1122	1973-80	Lower Fender Molding RH	**$10.00 ea**
M1123	1973-80	Lower Fender Molding LH	**$10.00 ea**

Drip Rail Molding

1102R	New	1947-54	Door Drip Rail Mldgs, Pr.	***Coming Soon!***

Windshield Moldings

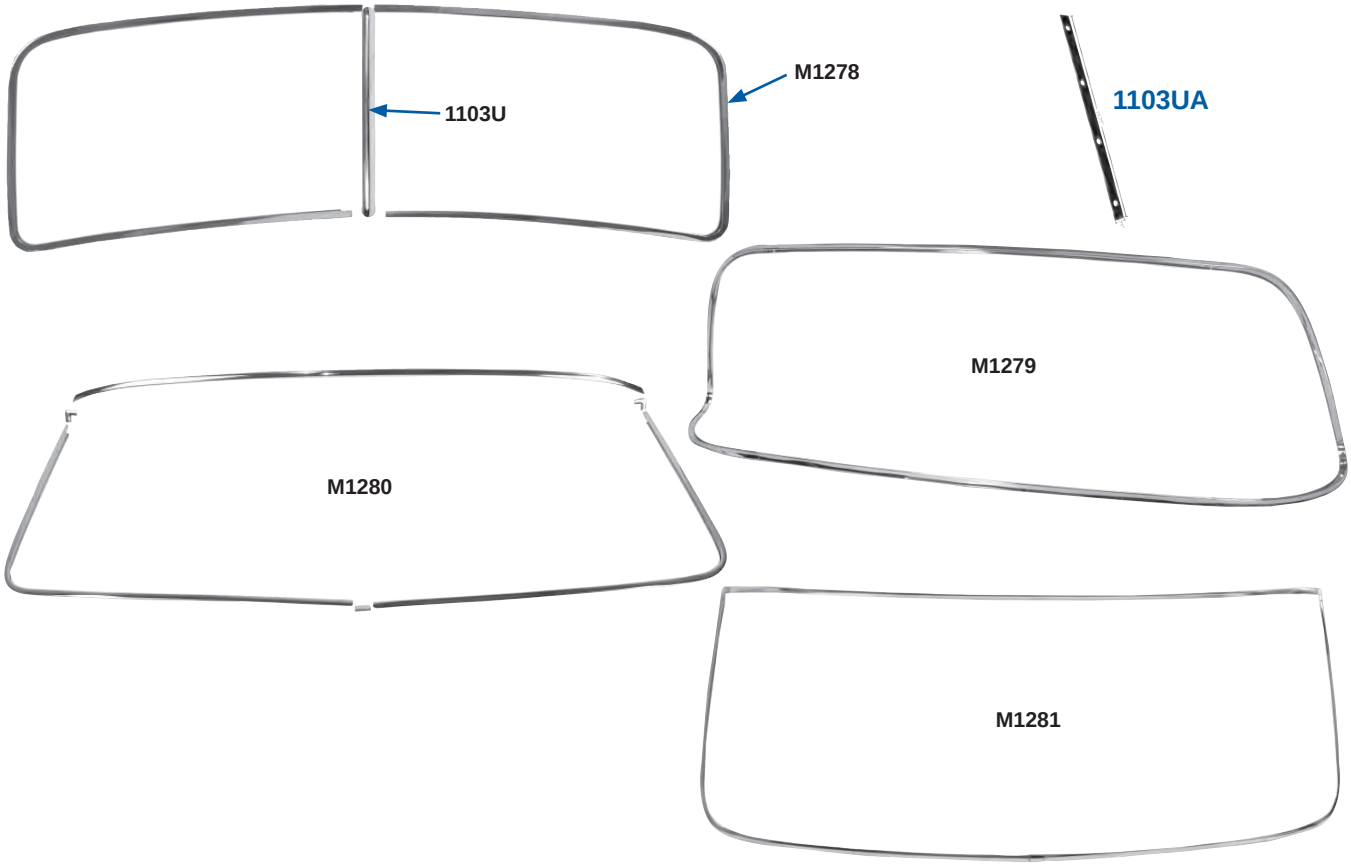

M1278		1947-53	Front Windshield Molding	$63.50 ea
1103U		1947-53	Windshield Vertical Center Molding, Front	$31.25 ea
1103UA	New	1947-53	Windshield Vertical Divider/ Trim Base	$12.25 ea
M1279		1955-59	Front Windshield Mldg, W/Clips, 4 pcs.	$135.00 set
M1280		1967-70	Front Windshield Mldg, W/Clips, 6 pcs.	$47.25 set
M1281		1971-72	Front Windshield Mldg, W/Clips, 6 pcs.	$47.25 set

Rear Window Moldings

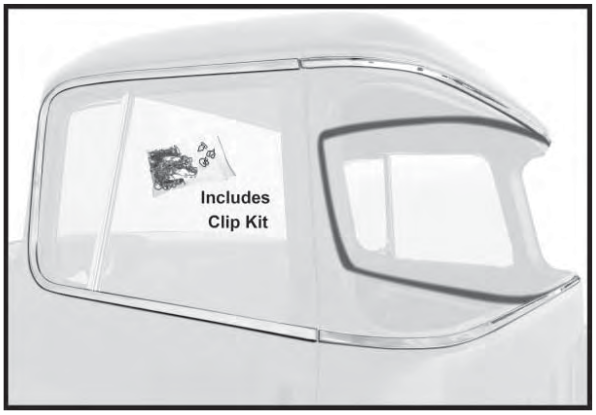

M1277

M1277	New	1955-59	Rear Window Moldings, 6 pcs	$106.50 set
M1282		1967-72	Rear Window Moldings, Fleetside, 3 pc.	$40.50 set

Exterior Mirrors

1151	1947-72	Exterior Round, Black, 5 in. Ribbed Back
		$8.50 ea
1151A	1947-72	Exterior Round, Chrome, 5 in. Ribbed Back
		$9.50 ea
1151B	1947-72	Exterior Round, Chrome, 5 in. Smooth Back
		$9.50 ea
1151C	1947-72	Exterior Round, Stainless, 5 5/8 in. Star
		$11.00 ea
1151D	1947-72	Exterior Rectangle, Black
		$8.50 ea
1151E	1947-72	Exterior Rectangle, Stainless
		$9.50 ea
1152R	1970-72	Exterior Rectangle Mirror Assembly RH
1152L	1970-72	Exterior Rectangle Mirror Assembly LH
		$32.50 ea

Exterior Mirror Arms

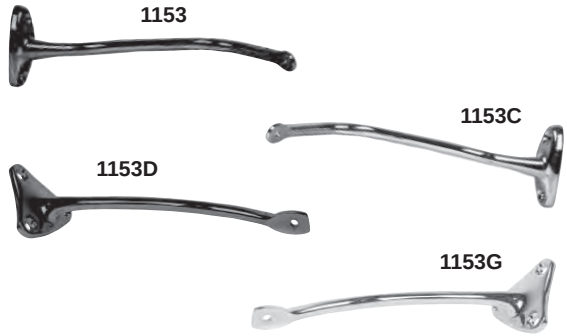

1153	1947-55	Mirror Arm, Black LH
1153B	1947-55	Mirror Arm, Black RH
		$13.50 ea
1153A	1947-55	Mirror Arm, Chrome LH
1153C	1947-55	Mirror Arm, Chrome RH
		$21.75 ea
1153D	1955-59	Mirror Arm, Black LH
1153F	1955-59	Mirror Arm, Black RH
		$16.25 ea
1153E	1955-59	Mirror Arm, Chrome LH
1153G	1955-59	Mirror Arm, Chrome RH
		$20.25 ea

1153H	1960-66	Mirror Arm, Black LH
1153J	1960-66	Mirror Arm, Black RH
		$16.25 ea
1153I	1960-66	Mirror Arm, Chrome LH
1153K	1960-66	Mirror Arm, Chrome RH
		$23.00 ea
1153L	1967-72	Mirror Arm, Black LH
1153N	1967-72	Mirror Arm, Black RH
		$16.25 ea
1153M	1967-72	Mirror Arm, Stainless LH
1153P	1967-72	Mirror Arm, Stainless RH
		$23.00 ea

Cab Moldings

M1234

M1214

M1237

M1174

M1214	1969-72	Upper Corner RH With Clips	$23.00 ea
M1215	1969-72	Upper Corner LH With Clips	$23.00 ea
M1234	1969-72	Lower Corner RH Black,With Clips	$21.75 ea
M1235	1969-72	Lower Corner LH Black, With Clips	$21.75 ea
M1236	1969-72	Lower Corner RH Wood	$25.75 ea
M1237	1969-72	Lower Corner LH Wood	$25.75 ea
M1174	1973-80	Upper/Lower Cab Molding	$5.50 ea

Side Moldings

M1198

M1196

M1196	1973-80	Quarter Trim, Upper RH, For Blazer/Jimmy	$28.50 ea
M1197	1973-80	Quarter Trim, Upper LH, For Blazer/Jimmy	$28.50 ea
M1198	1973-80	Quarter Trim, Lower Front 1/2 RH, For Blazer/Jimmy	$11.00 ea
M1199	1973-80	Quarter Trim, Lower Front 1/2 LH, For Blazer/Jimmy	$11.00 ea

Door Scuff Plates

M1119

M1118A

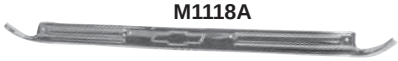

("Bowtie" detail)

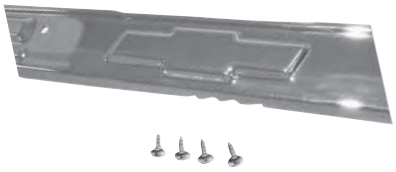

M1119A

M1118

M1119	1960-66	Door Scuff Plate	$17.75 ea
M1119A	1960-66	Door Scuff Plate For GMC	$19.00 ea
M1118	1967-72	Door Scuff Plate	$12.25 ea
M1118A	1967-72	Door Scuff Plate with Bowtie, Chrome	$16.25 ea
M1118B	1967-72	Door Scuff Plate with Bowtie, Stainless	$19.00 ea

Tailgate Moldings

M1260

M1263

M1260	1969-72	Upper Tailgate Molding, RH	$11.00 ea
M1262	1969-72	Upper Tailgate Molding, LH	$11.00 ea
M1263	1969-72	Lower Tailgate Molding (no clips)	$21.75 ea
M1186	1973-80	Upper/Lower Tailgate Mldg	$20.25 ea

For 6 Foot Bed

M1216	1969-72	Upper Short Bed Molding, Fits RH or LH	$47.25 ea
M1240	1969-72	Lower Front, RH Black, for Short Bed	$24.50 ea
M1241	1969-72	Lower Front, LH Black, for Short Bed	$24.50 ea
M1242	1969-72	Lower Front, RH Wood, for Short Bed	$29.75 ea
M1243	1969-72	Lower Front, LH Wood, for Short Bed	$29.75 ea
M1250	1969-72	Lower Rear, RH Black, for Short Bed	$29.75 ea
M1251	1969-72	Lower Rear, LH Black, for Short Bed	$29.75 ea
M1252	1969-72	Lower Rear, RH Wood, for Short Bed	$35.25 ea
M1253	1969-72	Lower Rear, LH Wood, for Short Bed	$35.25 ea

M1190	1973-80	Upper Mldg, RH 6.5 Foot	$20.25 ea
M1191	1973-80	Upper Mldg, LH 6.5 Foot	$20.25 ea
M1192	1973-80	Lower Front Mldg, RH 6.5 Foot	$12.25 ea
M1193	1973-80	Lower Front Mldg, LH 6.5 Foot	$12.25 ea
M1194	1973-80	Lower Rear Mldg, RH 6.5 Foot	$12.25 ea
M1195	1973-80	Lower Rear Mldg, LH 6.5 Foot	$12.25 ea

For 8 Foot Bed

M1217	1969-72	Upper Long Bed Mldg, RH or LH	$51.50 ea
M1244	1969-72	Lower Front, RH Black, for Long Bed	$33.75 ea
M1245	1969-72	Lower Front, LH Black, for Long Bed	$33.75 ea
M1246	1969-72	Lower Front, RH Wood, for Long Bed	$39.25 ea
M1247	1969-72	Lower Front, LH Wood, for Long Bed	$39.25 ea
M1254	1969-72	Lower Rear, RH Black, for Long Bed	$36.50 ea
M1255	1969-72	Lower Rear, LH Black, for Long Bed	$36.50 ea
M1256	1969-72	Lower Rear, RH Wood, for Long Bed	$40.50 ea
M1257	1969-72	Lower Rear, LH Wood, for Long Bed	$40.50 ea

M1180	1973-80	Upper Mldg, RH 8 Foot	$21.50 ea
M1181	1973-80	Upper Mldg, LH 8 Foot	$21.50 ea
M1182	1973-80	Lower Front Mldg, RH 8 Foot	$12.25 ea
M1183	1973-80	Lower Front Mldg, LH 8 Foot	$12.25 ea
M1184	1973-80	Lower Rear Mldg, RH 8 Foot	$13.50 ea
M1185	1973-80	Lower Rear Mldg, LH 8 Foot	$13.50 ea

Shift Lever

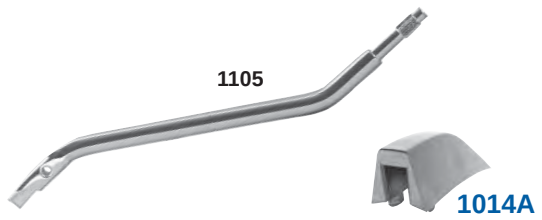

1105	1968-72	Shift Lever With Tilt, C-10
		$39.25 ea
1014A	1969-70	Trans. Shifter Indicator for Column Shift, Automatic Transmission
		$8.25 ea

Throttle Linkage

1013	1955-59	Throttle Linkage for V-8
		$46.00 ea

Accelerator Pedal Assy.

1106	New	1955-57	Accelerator Pedal Assembly
			Coming Soon!

Emergency Brake

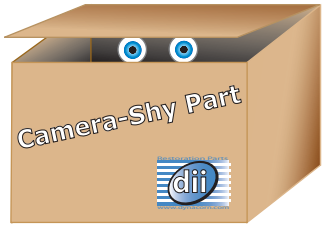

1220	New	1967-72	Emergency Brake Assembly
			Coming Soon!

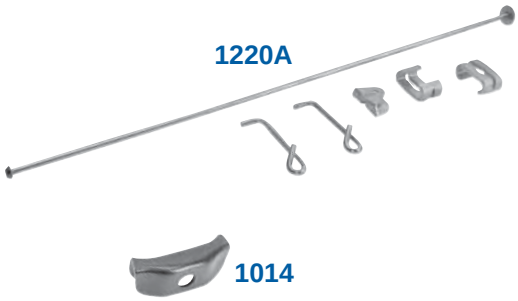

1014	New	1966-72	Emergency Brake Equalizer
			$6.75 ea
1220A	New	1967-72	E-Brake Cable Guide, 6 pcs.
			$17.75 set
1080	New	1969-72	Emergency Brake Cable
			$97.25 ea

Brake Pad & Trim

3935721	1967-81	Disc Brake Pedal Pad, 4 speed
		$6.75 ea
K911	1967-75	Clutch Pedal Pad Trim, Manual Trans. & '67-'81 Brake Pedal Pad Trim
		$4.00 ea

SW29

SW20

SW21

SW22

SW23

SW29	1947-66	Steering Wheel Horn Contact Pin Spring	**$5.00 ea**
SW20	1947-53	Steering Wheel, Black	**$190.00 ea**
SW21	1954-56	Steering Wheel, Black	**$190.00 ea**
SW22	1957-59	Steering Wheel, Black	**$190.00 ea**
SW23	1960-66	Steering Wheel, Black	**$190.00 ea**

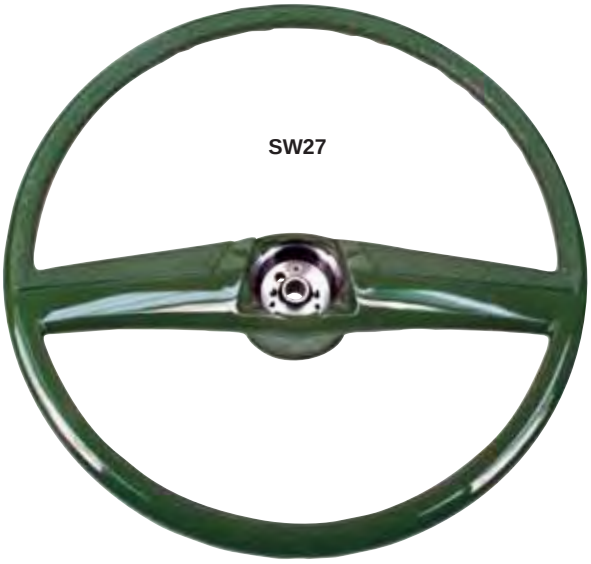

SW24	1967-68	Steering Wheel, Black	**$190.00 ea**
SW25	1969-72	Steering Wheel, Black	**$187.75 ea**
SW26	1969-72	Steering Wheel, Blue	**$187.75 ea**
SW27	1969-72	Steering Wheel, Green	**$187.75 ea**
SW28	1969-72	Steering Wheel, Saddle	**$187.75 ea**

Interior Mirrors

1154A	1947-53	Rear View Mirror, Day/Night	$40.50 ea
1154	1947-59	Rear View Mirror, Stainless	$16.25 ea
1154B	1954-59	Rear View Mirror, Day/Night	$39.00 ea
1154D	1960-64	Rear View Mirror, Day/Night	$47.25 ea
1154C	1960-71	Rear View Mirror, Stainless	$16.25 ea
911366	1965-71	Rear View Mirror, Stainless, 10 Inch	$32.50 ea
1154F	1972-92	Rear View Mirror, Day/Night	$40.50 ea

Int. Mirror Brackets

1155A	1947-53	R.View Mirror Bracket, Chrome	$5.50 ea
1155B	1954-55	Rear View Mirror Bracket	$13.50 ea
1155C	1955-59	Rear View Mirror Bracket	$13.50 ea
1155D	1960-71	Rear View Mirror Bracket	$13.50 ea
1155E	1969-71	R. V. Mirror Brkt, Chrome W/Black Cover	$21.75 ea

Heater Box

1100R	1947-54	Heater Box	$135.00 ea

Evaporator Box

1100S	**New**	1967-72	Evaporator Box

Coming Soon!

Heater Control

1100T	**New**	1967-72	Heater Control

Coming Soon!

Dash Bezels & Appliques

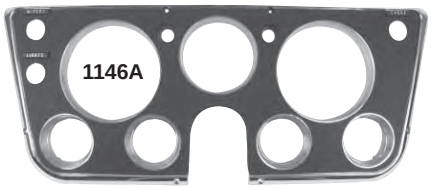

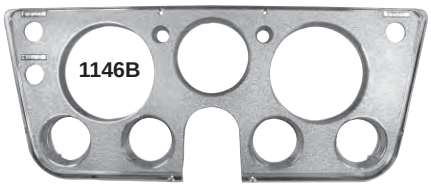

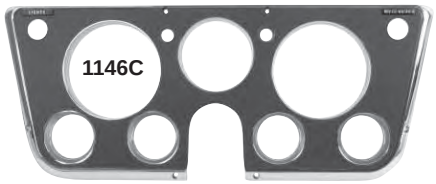

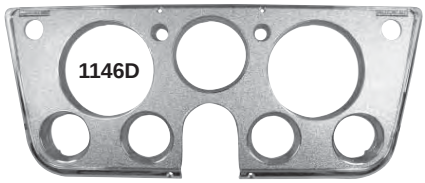

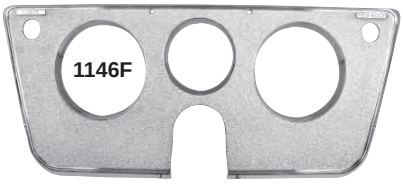

1146A	1967-68	Dash Bezel, Black With Trim	**$38.00 ea**
1146B	1967-68	Dash Bezel, Chrome	**$38.00 ea**
1146C	1969-72	Dash Bezel, Black With Trim	**$35.00 ea**
1146D	1969-72	Dash Bezel, Chrome	**$35.00 ea**
1146E	1969-72	Dash Bezel, 3-Hole Black & Chrome	**$35.00 ea**
1146F	1969-72	Dash Bezel, 3-Hole Chrome	**$35.00 ea**

1146G

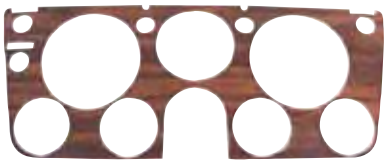

1146H

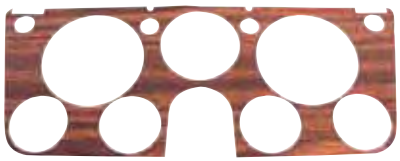

1146G	1967-68	Dash Bezel Applique, Woodgrain	**$9.50 ea**
1146H	1969-72	Dash Bezel Applique, Woodgrain	**$9.50 ea**

Instrument Bezels

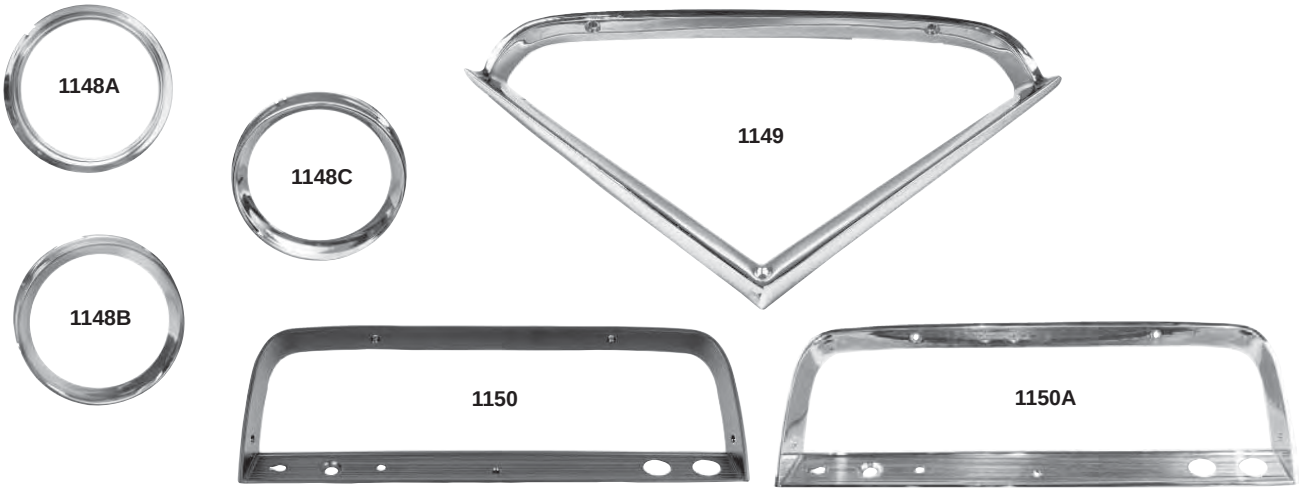

1148A	1947-53	Instrument Bezel, Chrome	**$10.75 ea**
1148B	1954-55	Instrument Bezel, Stainless	**$13.50 ea**
1148C	1954-55	Instrument Bezel, Chrome	**$16.25 ea**
1149	1955-59	Instrument Bezel, Chrome	**$40.50 ea**
1150	1964-66	Instrument Bezel, Black	**$66.25 ea**
1150A	1964-66	Instrument Bezel, Chrome	**$87.75 ea**

Instrument Cluster Lenses

1147A	1955-59	Instrument Cluster Lens	**$28.00 ea**
1147B	1967-72	Instrument Cluster Lens, 3 Hole	**$35.00 ea**
1147C	1967-72	Instrument Cluster Lens, W/O Tachometer, Vacuum	**$35.00 ea**
1147D	1967-72	Instrument Cluster Lens, With Tachometer, W/O Vacuum	**$35.00 ea**
1147E	1967-72	Instrument Cluster Lens, With Tachometer, Vacuum	**$35.00 ea**

Speaker Covers

211	1955-59	Radio Speaker Cover, Black
		$47.25 ea
21100	1955-59	Radio Speaker Cover, Chrome
		$54.00 ea

Wiper Knob

1103VA	1955-59	Wiper Knob, GMC
		$6.75 ea

Seat Adjust Handle

1105D	1955-66	Seat Adjustment Handle, Stainless
		$19.00 ea

Dash Speaker Grilles

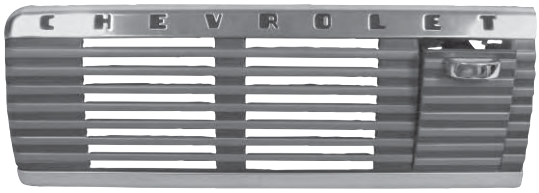

1114I	1947-53	Dash Speaker Grille With Ash Tray, "Chevrolet"
		$93.50 ea

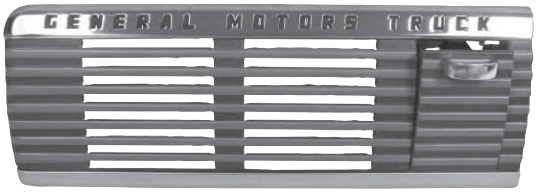

1114L	1947-53	Dash Speaker Grille W/Ash Tray, "General Motors Truck"
		$93.50 ea

Kick Panel Vent Doors

1009A	1967-72	Kick Panel Vent Door RH
1009B	1967-72	Kick Panel Vent Door LH
		$43.25 ea

Glovebox

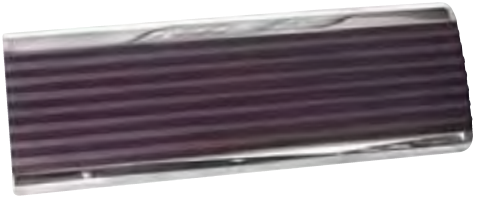
1102U

1114M

1102UA

1114J

1102U		1947-54	Glove Box Door, Stainless	**$87.75 ea**
1102UA		1947-54	Glove Box Door Hinges	**$31.25 pr**
1114J	New	1955-59	Glove Box Door W/Hinges & Screws, Chevy Only	**$79.75 ea**
1114N	New	1960-66	Glove Box Door Hinge Bushing	***Coming Soon!***
1114M		1967-72	Glove Box Door, Black	**$67.50 ea**

Side Markers

L1154

L1155

L1153

L1153A

L1154	1968-72	Front Side Marker Without Chrome
L1153	1968-72	Rear Side Marker Without Chrome
		$8.25 ea
L1155	1968-72	Front Side Marker With Chrome
L1153A	1968-72	Rear Side Marker With Chrome
		$11.00 ea

Parking Lamp Bezels

LP05A

LP05B

LP05

LP05A	1947-53	Parking Lamp Bezel
		$8.25 ea
LP05B	1958-59	Parking Lamp Bezel
		$33.75 ea
LP05	1962-66	Parking Lamp Bezel
		$11.00 ea

LP02	1947-53	Parking Lamp Assembly, Amber 6V	**$29.75 ea**
LP01	1947-53	Parking Lamp Assembly, Amber 12V	**$29.75 ea**
LP03	1947-53	Parking Lamp Assembly, Clear 6V	**$29.75 ea**
LP04	1947-53	Parking Lamp Assembly, Clear 12V	**$29.75 ea**

LP06	1954-55	Parking Lamp Assembly, Clear 6V	**$29.75 ea**
LP07	1954-55	Parking Lamp Assembly, Clear 12V	**$29.75 ea**
LP08	1955-57	Parking Lamp Assembly, Clear 12V	**$24.50 ea**
LP09	1955-57	Parking Lamp Assembly, Amber 12V	**$24.50 ea**

LP10	1958-59	Parking Lamp Assembly, Clear	**$47.25 ea**
LP11	1958-59	Parking Lamp Assembly, Amber	**$47.25 ea**
LP12	1967-68	Parking Lamp Assembly, RH Amber	**$47.25 ea**
LP13	1967-68	Parking Lamp Assembly, LH Amber	**$47.25 ea**
LP14	1971-72	Parking Lamp Assembly, RH Amber	**$47.25 ea**
LP15	1971-72	Parking Lamp Assembly, LH Amber	**$47.25 ea**

Tail Lamp Housing

LP60		1960-66	Tail Lamp Housing
			$19.00 ea
LP49	New	1967-72	Tail Lamp Housing
			Coming Soon!

Tail Lamp Bezels

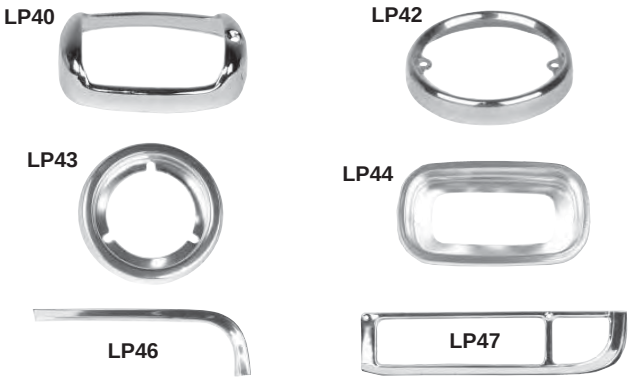

LP40	1940-53	Tail Lamp Bezel, Chrome	**$5.50 ea**
LP41	1954-55	Tail Lamp Bezel, Chrome	**$5.50 ea**
LP42	1955-59	Tail Lamp Bezel, Stainless	**$5.50 ea**
LP43	1958-59	Tail Lamp Bezel, For Fleetside	**$11.00 ea**
LP44	1960-66	Tail Lamp Bezel, For Fleetside	**$11.00 ea**
LP45	1967-68	Tail Lamp Bezel, RH For Fleetside	**$17.75 ea**
LP46	1967-68	Tail Lamp Bezel, LH For Fleetside	**$17.75 ea**
LP47	1969-72	Tail Lamp Bezel, RH For Fleetside	**$13.50 ea**
LP48	1969-72	Tail Lamp Bezel, LH For Fleetside	**$13.50 ea**

Tail Lamp Lenses

LP25	1960-66	Tail Lamp Lens, Red For Fleetside	**$5.50 ea**
LP26	1967-72	Tail Lamp Lens, Red For Fleetside	**$5.50 ea**
LP27	1967-72	Tail Lamp Lens, Clear, For Fleetside	**$6.75 ea**
LP28	1967-72	Tail Lamp Lens, Red	**$16.25 ea**

Tail Lamp Assys.

LP17	1940-53	Tail Lamp Assembly, Black With Chrome RH	**$25.75 ea**
LP18	1940-53	Tail Lamp Assembly, Black With Chrome LH	**$25.75 ea**
LP19	1940-53	Tail Lamp Assembly, Chrome RH	**$29.75 ea**
LP20	1940-53	Tail Lamp Assembly, Chrome LH	**$29.75 ea**

Tail Lamp Assemblies

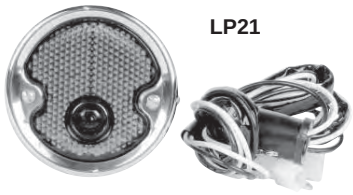

LP21	1954-55	Tail Lamp Assembly, Black With Stainless	$27.00 ea
LP22	1954-55	Tail Lamp Assembly, Stainless	$38.00 ea
LP23	1955-59	Tail Lamp Assembly, Black With Stainless	$27.00 ea
LP24	1955-59	Tail Lamp Assembly, Stainless	$38.00 ea
LP29	1960-66	Tail Lamp Assembly, Black For Stepside	$27.00 ea
LP30	1960-66	Tail Lamp Assembly, Stainless For Stepside	$38.00 ea
LP31	1967-72	Tail Lamp Assembly, Black For Stepside	$33.75 ea
LP31A	1967-72	Tail Lamp Assembly, Stainless For Stepside	$46.00 ea

License Plate Lamp

LP16A	1940-53	License Plate Lamp Lens, Clear	$5.50 ea

LP16	1967-87	License Plate Lamp	$24.50 ea

Horns

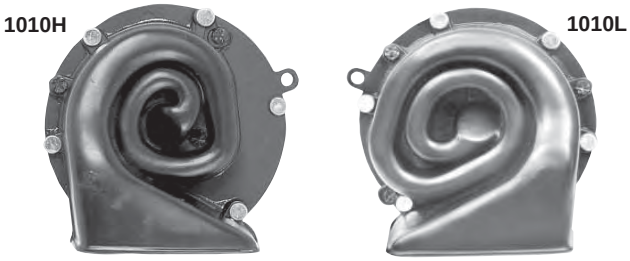

1010H	Horn,	High
1010L	Horn,	Low

$52.75 ea

Back Up Lamp & Lenses

LP32	1960-66	Back-up Lamp, Chrome	$38.00 ea

LP35	1967-72	Back-up Lamp, Assembly for Fleetside, RH
LP36	1967-72	Back-up Lamp, Assembly for Fleetside, LH

$19.00 ea

LP33	1967-72	Back Up Lamp Lens, RH For Fleetside	$4.00 ea
LP34	1967-72	Back Up Lamp Lens, LH For Fleetside	$4.00 ea

Headlamp Switches

L231

L230

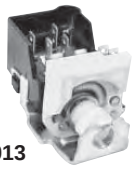
M1013

L231		1947-54	Head Lamp Switch, 6 Volt, **Without** fused dome, stop light & glovebox	**$47.25 ea**
L232	New	1947-54	Head Lamp Switch, 6 Volt, **With** fused dome, stop light & glovebox	**$47.25 ea**
L233	New	1947-54	Head Lamp Switch, 12 Volt, **Without** fused dome, stop light & glovebox	**$47.25 ea**
L234	New	1947-54	Head Lamp Switch, 12 Volt, **With** fused dome, stop light & glovebox	**$47.25 ea**
L230		1955-59	Head Lamp Switch, 12 Volt	**$13.50 ea**
M1013		1964-72	Head Lamp Switch	**$9.50 ea**

Wiper Motor Trans. Arm

1100

1106W

1103VX	New	1947-53	Wiper Motor Transmission Arm	**$114.75 pr**
1103V	New	1955-59	Wiper Motor Transmission Arm	**$105.50 pr**
1100		1960-66	Wiper Motor Transmission Arm	**$81.00 pr**
1106W		1967-72	Wiper Motor Transmission Arm	**$81.00 pr**

Dome Lamp Assys.

LP50

LP51

LP53

LP54

LP50	1947-55 1st Series	Dome Lamp Assembly, Painted	**$39.25 ea**
LP51	1947-55 1st Series	Dome Lamp Assembly, Chrome	**$44.50 ea**
LP52	1955-59	Dome Lamp Assembly, Chrome	**$16.25 ea**
LP53	1960-72	Dome Lamp Assembly, White Base	**$11.00 ea**
LP54	1960-72	Dome Lamp Assembly, Chrome Base	**$17.50 ea**

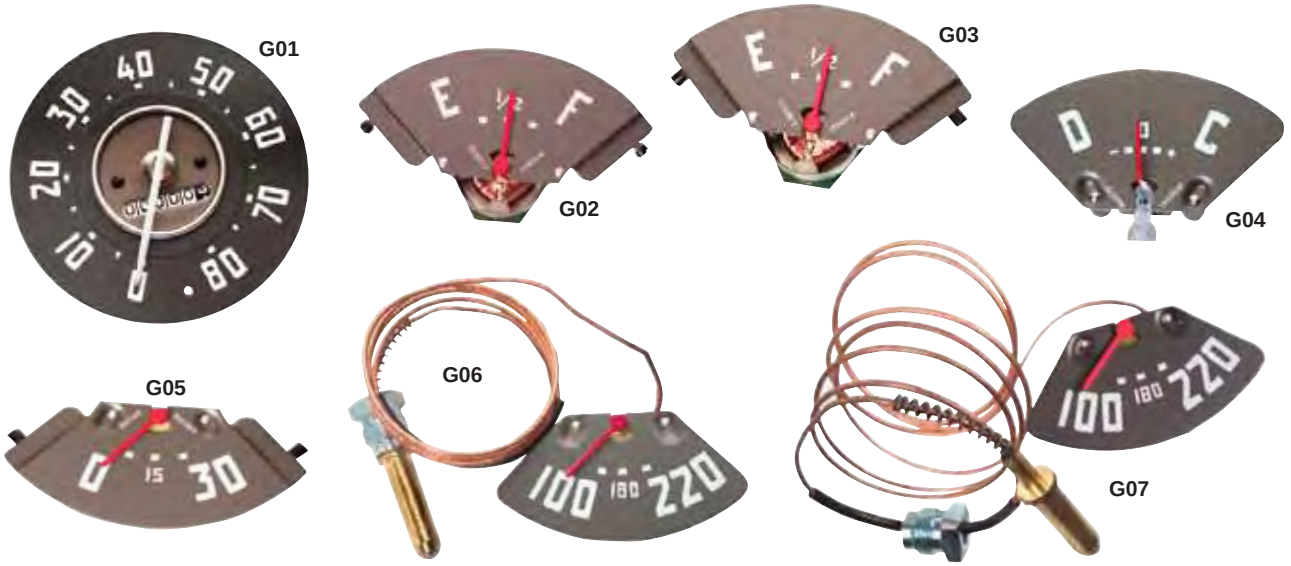

G01	1947-49	Speedometer, 0-80 MPH	$105.00 ea
G02	1947-49	Fuel Gauge, Red Needle, 6 Volt	$52.75 ea
G03	1947-49	Fuel Gauge, Red Needle, 12 Volt	$52.75 ea
G04	1947-49	Amp Gauge, Red Needle	$52.75 ea
G05	1947-49	Oil Pressure Gauge, Red Needle	$52.75 ea
G06	1947-49	Temperature Gauge, Red Needle, 6 cyl. length line	$52.75 ea
G07	1947-49	Temperature Gauge, Red Needle, 8 cyl. length line	$52.75 ea

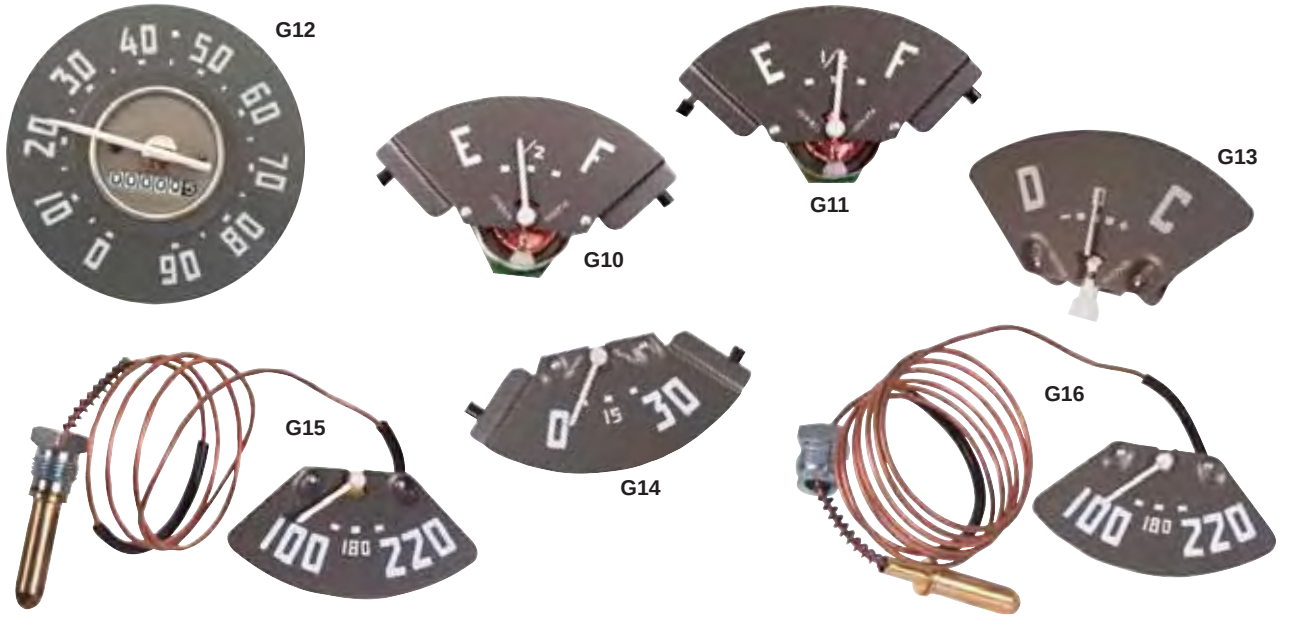

G12	1950-53	Speedometer, 0-90 MPH	$114.75 ea
G10	1950-53	Fuel Gauge, White Needle, 6 Volt	$52.75 ea
G11	1950-53	Fuel Gauge, White Needle, 12 Volt	$52.75 ea
G13	1950-53	Battery Gauge, White Needle	$52.75 ea
G14	1950-53	Oil Pressure Gauge, White Needle	$52.75 ea
G15	1950-53	Temperature Gauge, White Needle, 6 cyl. length line	$52.75 ea
G16	1950-53	Temperature Gauge, White Needle, 8 cyl. length line	$52.75 ea

Dash Gauges,continued

G20	1955-59	Speedometer	$114.75 ea
G21	1955-59	Fuel Gauge	$60.75 ea
G22	1955-59	Temperature Gauge, Electric	$60.75 ea
G23	1955-59	Ammeter Gauge	$60.75 ea
G24	1955-59	Oil Pressure Gauge	$60.75 ea

G30	1967-72	Speedometer	$94.50 ea
G31	1967-72	Tachometer	$100.00 ea
G32	1967-72	Fuel Gauge	$30.00 ea
G33	1967-72	Temperature Gauge	$30.00 ea

G34	1967-72	Ammeter Gauge	$30.00 ea
G35	1967-72	Oil Pressure Gauge	$60.00 ea
G36	1967-72	Vacuum Gauge	$60.00 ea

Shocks & Bracket

1011B		1947-54	Shock Absorber Bracket	$20.25 ea
1012		1955-59	Shock Absorbers, Front	$62.25 pr
1012A		1955-59	Shock Absorbers, Rear	$62.25 pr
1012B	New	1960-72	Coil Spring Rear Retainer	$9.50 ea

Ignition Locks

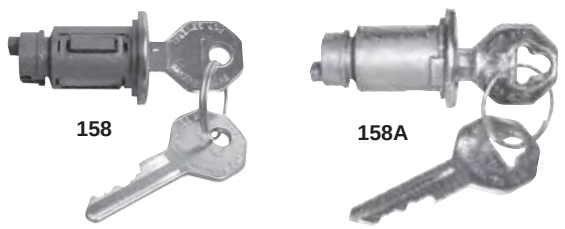

158	1965	Ignition Lock, Non-GM Octagonal	**$8.25 kit**
158A	1965	Ignition Lock, Original Octagonal	**$11.00 kit**

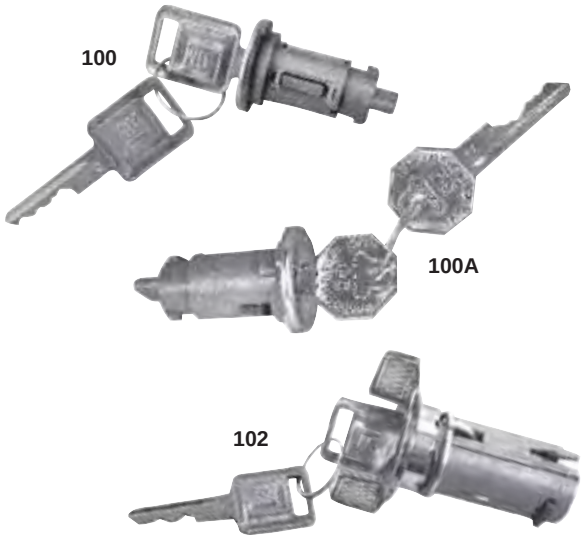

100A	1967-68	Ignition Lock, Original	**$12.25 kit**
100	1967-72	Ignition Lock, Later	**$9.50 kit**
102	1973-78	Ignition Lock, Later	**$12.25 kit**

Ignition & Door Kits

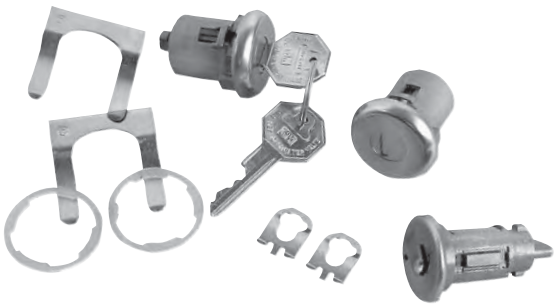

104A	1967-68	Ignition & Door Kit, Original	**$25.75 kit**

104	1967-72	Ignition & Door Kit, Later	**$21.75 kit**
106	1973-78	Ignition & Door Kit, Later	**$25.75 kit**

See our Locks Section for more details...

Ignition, Door & Glovebox Kits

285	1967-68	Ignition/Door/Glove Kit, Original	**$40.50 kit**
284	1967-72	Ignition/Door/Glove Kit, Later	**$36.50 kit**

Glovebox Locks

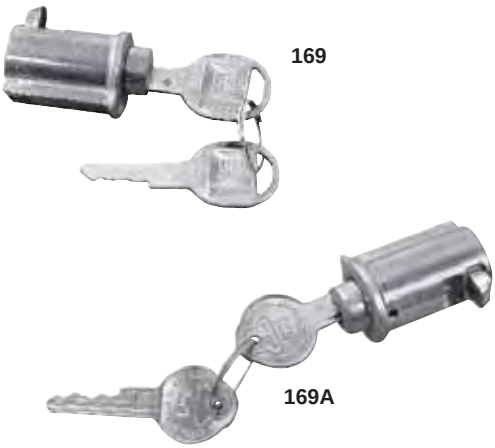

169A	1954-72	Glove Box Lock, Original	**$23.00 kit**
169	1954-72	Glove Box Lock, Later	**$17.75 kit**

Seat Belts with Push Button:
6 colors to choose from

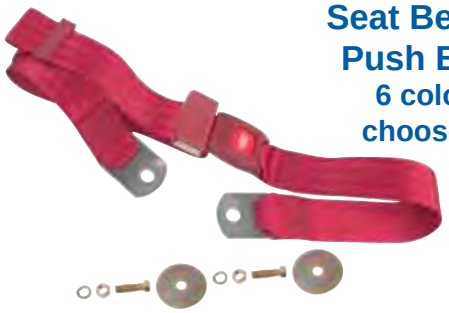

60 Inch Belts

SBP-BK60	Seat Belt with Push Button	**Black**
SBP-GR60	Seat Belt with Push Button	**Grey**
SBP-TAN60	Seat Belt with Push Button	**Tan**
SBP-NB60	Seat Belt with Push Button	**Navy Blue**
SBP-RED60	Seat Belt with Push Button	**Red**
SBP-MAR60	Seat Belt with Push Button	**Maroon**

$25.00 ea

74 Inch Belts

SBP-BK74	Seat Belt with Push Button	**Black**
SBP-GR74	Seat Belt with Push Button	**Grey**
SBP-TAN74	Seat Belt with Push Button	**Tan**
SBP-NB74	Seat Belt with Push Button	**Navy Blue**
SBP-RED74	Seat Belt with Push Button	**Red**
SBP-MAR74	Seat Belt with Push Button	**Maroon**

$25.00 ea

SBR-BK

SBEXT-BK

SBR-BK	Retractable 3 Point Seat Belt with Push Button	**Black**

$60.00 ea

SBEXT-BK	Seat Belt Extension, 12 in.	**Black**

$13.50 ea

See also Accessory Section for more details...

Seat Belts with Lift Latch:
10 colors to choose from

60 Inch Belts

SBL-BK60	Seat Belt with Lift Latch	**Black**
SBL-WT60	Seat Belt with Lift Latch	**White**
SBL-LG60	Seat Belt with Lift Latch	**Light Grey**
SBL-DG60	Seat Belt with Lift Latch	**Dark Grey**
SBL-LT60	Seat Belt with Lift Latch	**Light Tan**
SBL-DT60	Seat Belt with Lift Latch	**Dark Tan**
SBL-LB60	Seat Belt with Lift Latch	**Light Blue**
SBL-DB60	Seat Belt with Lift Latch	**Dark Blue**
SBL-BR60	Seat Belt with Lift Latch	**Bright Red**
SBL-DR60	Seat Belt with Lift Latch	**Dark Red**

$25.00 ea

74 Inch Belts

SBL-BK74	Seat Belt with Lift Latch	**Black**
SBL-WT74	Seat Belt with Lift Latch	**White**
SBL-LG74	Seat Belt with Lift Latch	**Light Grey**
SBL-DG74	Seat Belt with Lift Latch	**Dark Grey**
SBL-LT74	Seat Belt with Lift Latch	**Light Tan**
SBL-DT74	Seat Belt with Lift Latch	**Dark Tan**
SBL-LB74	Seat Belt with Lift Latch	**Light Blue**
SBL-DB74	Seat Belt with Lift Latch	**Dark Blue**
SBL-BR74	Seat Belt with Lift Latch	**Bright Red**
SBL-DR74	Seat Belt with Lift Latch	**Dark Red**

$25.00 ea

SBL-BK60BK

SBL-BK60BK	Seat Belt w/Black Wrinkle-Finish Latch	**Black**

$30.00 ea

SBL-BK74BK	Seat Belt w/Black Wrinkle-Finish Latch	**Black**

$30.00 ea

BLAZER/JIMMY

1967-71
Door Shells

1103JD
Right

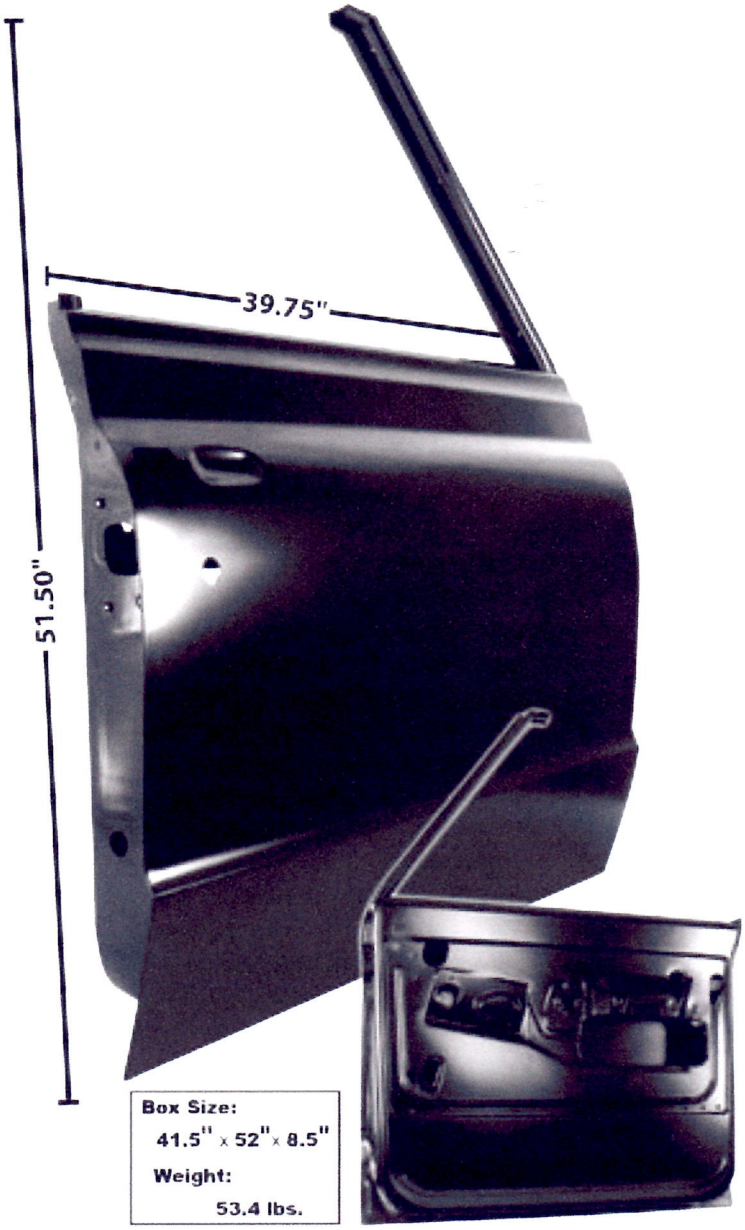

1103JD	1967-71	RH Door Shell, Blazer/Jimmy
1103KD	1967-71	LH Door Shell, Blazer/Jimmy

$376.75 each

FORD® BRONCO™ & TRUCK

New Product Line for 2010!

Dynacorn International Inc.

dii

2010

Dynacorn International Inc.

Ford® Truck & Bronco® Index

B

Battery Tray: 1
Bumpers: 1

C

Crossrail, Rear Floor: 3

D

Door Handles & Cranks: 7
Door Latches & Striker: 6
Door Shells: 5
Door Skins: 6
Door Window Frames: 6
Door Jambs: 12

F

Fenders: 1, 9
Floor Pans: 3
Fuel Sending Unit: 5

G

Grille & Components: 8

H

Hoods & Hood Bumpers: 2

M

Mirrors
- Exterior: 7
- Interior Mounting Bracket: 7

Q

Quarter Panel Skin: 5, 11

R

Rocker Panels: 4
Roof Panel: 2

S

Seat Belts: 10
Seat Frame Assemblies & Tracks: 4
Seat Side Molding: 4

T

Tailgate Corner: 5
Truck Parts: 9

V

Vent Window Handles: 7

W

Wheelhouses: 1
Wheel Opening Moldings: 8, 9
Window Frames: 3
Window Rollers: 7

Ford Oval and Mustang are registered trademarks owned by Ford Motor Company.

Bumpers

Truck Freight Recommended

3700	New	1966-77	Front or Rear Bumper, Chrome Bronco©	*Coming Soon!*
3701	New	1966-77	Front or Rear Bumper, Painted Bronco©	*Coming Soon!*

Fenders

Truck Freight ONLY

3699N	New	1966-77	Front Fender, RH Bronco	**$228.50 ea**
3699P	New	1966-77	Front Fender, LH Bronco	**$228.50 ea**

Wheelhouses

3780	New	1966-77	Wheelhouse, RH Bronco©
3781	New	1966-77	Wheelhouse, LH Bronco©

Coming Soon!

Battery Tray

3704	New	1966-77	Battery Tray Bottom Bronco©

Coming Soon!

Hood

3750

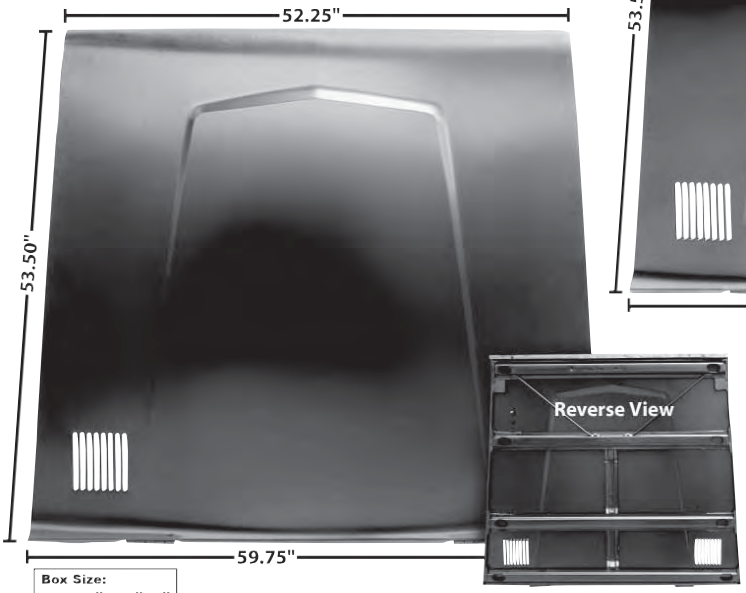

Box Size:
62.25" x 55" x 5"
Weight:
50.7 lbs.

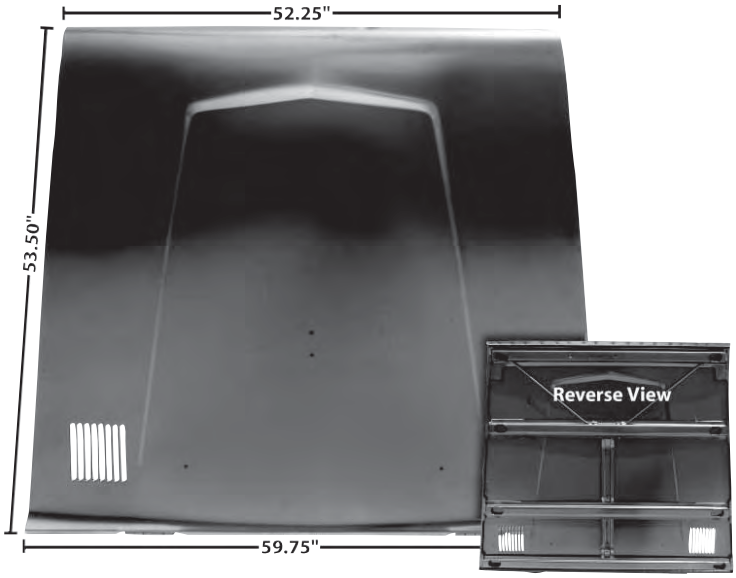

3751

M3510

3750	New	1966-77	Hood, Bronco	$349.75 ea
3751	New	1966-69	Hood with Windshield Hook Holes, Bronco	$349.75 ea
M3510		1968-77	Hood Adjuster Bumpers (on radiator)	$4.00 pr

Roof Panel

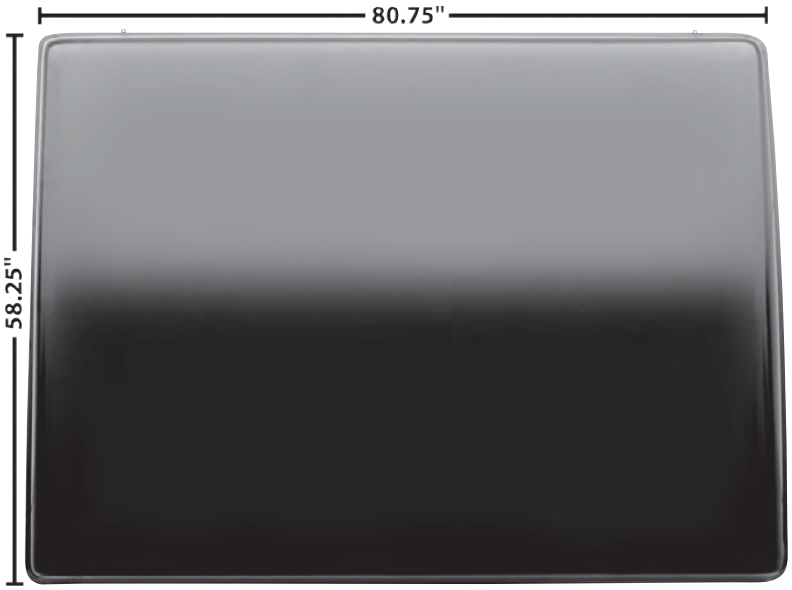

Box Size:
84" x 63" x 7.25"
Weight:
83.8 lbs.

3752	New	1966-77	Roof Panel Bronco	$600.00 ea

Window Frames

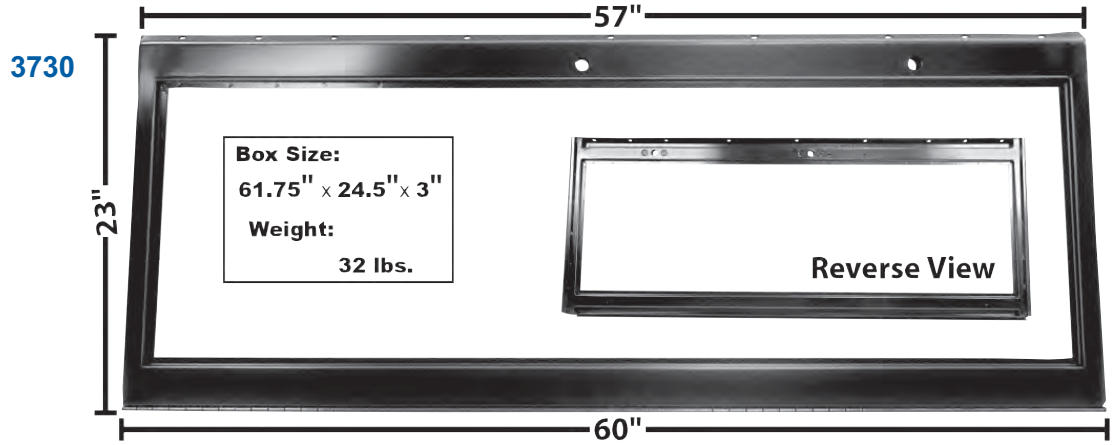

3730	New	1966-77	Windshield Frame Bronco	$400.00 ea
3731	New	1966-77	Windshield Frame Hinge Bronco	$60.75 ea
3737	New	1966-77	Rear Window Frame Bronco©	Coming Soon!
3736	New	1966-77	Rear Window Props, pr. Bronco©	Coming Soon!

Floor Pans

Truck Freight ONLY

RESTORER'S DYNACORN CERTIFIED CHOICE

3741	New	1966-77	Front Floor Pan Bronco©	Coming Soon!
3740	New	1966-77	Rear Floor Pan Bronco©	Coming Soon!
3742	New	1966-77	Rear Floor Crossrail Bronco©	Coming Soon!

Rocker Panels

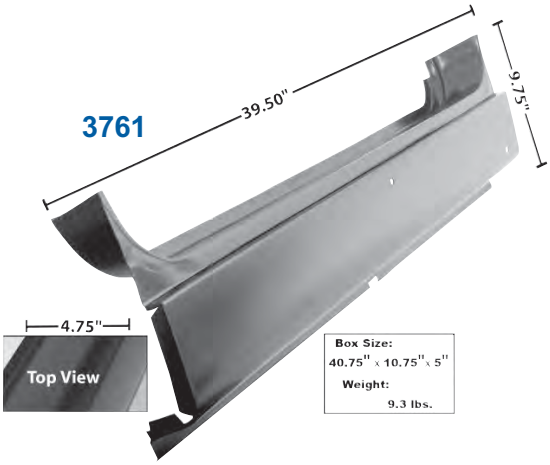

3760	New	1966-77	Rocker Panel, RH Bronco	$60.75 ea
3761	New	1966-77	Rocker Panel, LH Bronco	$60.75 ea

Seat Frame Assemblies & Tracks

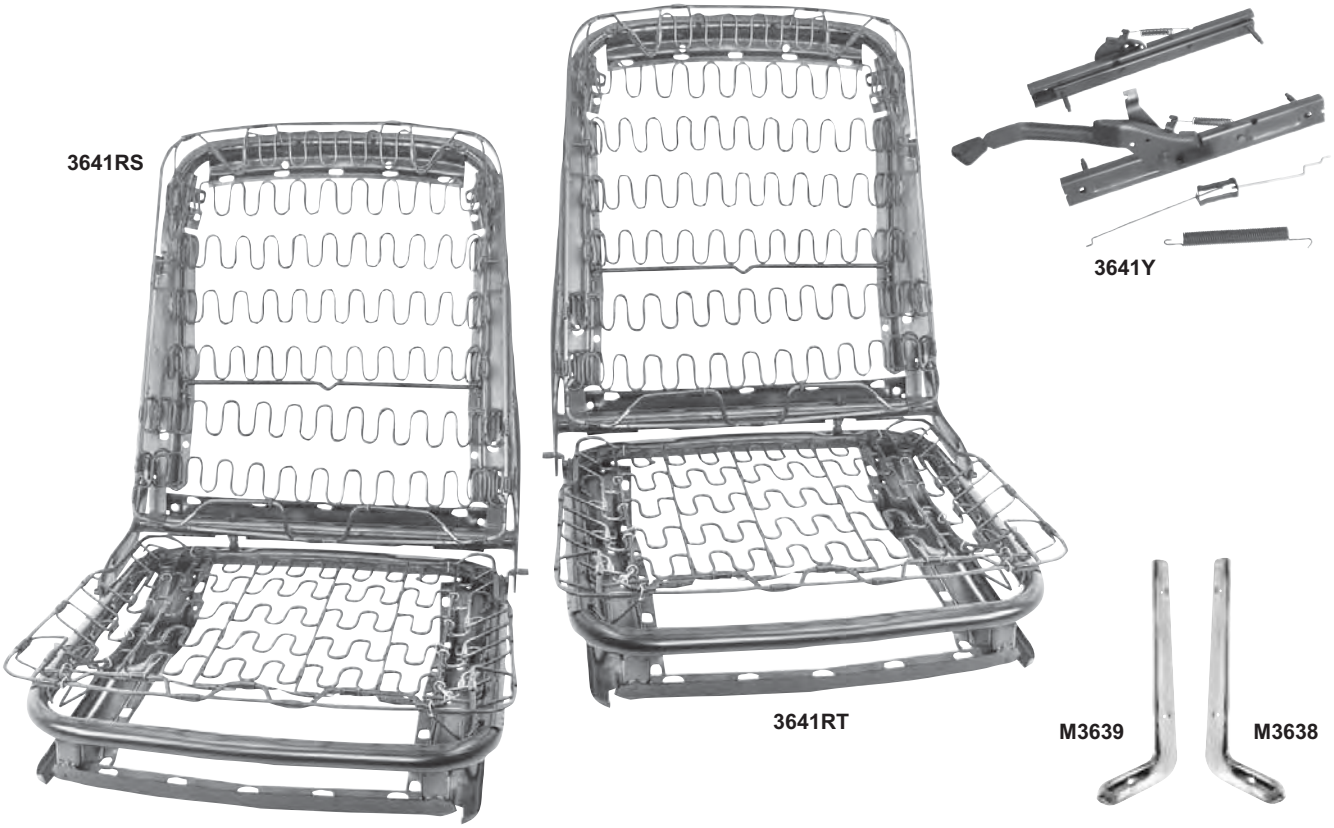

3641RS	1966-67	Front Seat Frame, RH	$400.00 ea
3641RT	1966-67	Front Seat Frame, LH	$400.00 ea
3641Y	1966-67	Seat Track Assembly	$59.50 set
M3638	1966	Seat Side Molding RH (Modify for 1967-69)	$13.50 ea
M3639	1966	Seat Side Molding LH (Modify for 1967-69)	$13.50 ea

Website: www.musclecar-parts.com 2010 Phone: (715) 937-2520

3790	New	1966-77	Quarter Panel Skin, RH Bronco©	Coming Soon!
3791	New	1966-77	Quarter Panel Skin, LH Bronco©	Coming Soon!
T90	New	1966-70	Fuel Sending Unit, without Vapor Tube Bronco©	Coming Soon!
T91	New	1966-77	Fuel Sending Unit, with Vapor Tube Bronco©	Coming Soon!
3794	New	1966-77	Tailgate Corner, RH Bronco©	Coming Soon!
3795	New	1966-77	Tailgate Corner, LH Bronco©	Coming Soon!

3710	New	1966-67	Door Shell, RH Bronco©	Coming Soon!
3711	New	1966-67	Door Shell, LH Bronco©	Coming Soon!
3718	New	1968-77	Door Shell, RH Bronco©	Coming Soon!
3719	New	1968-77	Door Shell, LH Bronco©	Coming Soon!

Door Skins

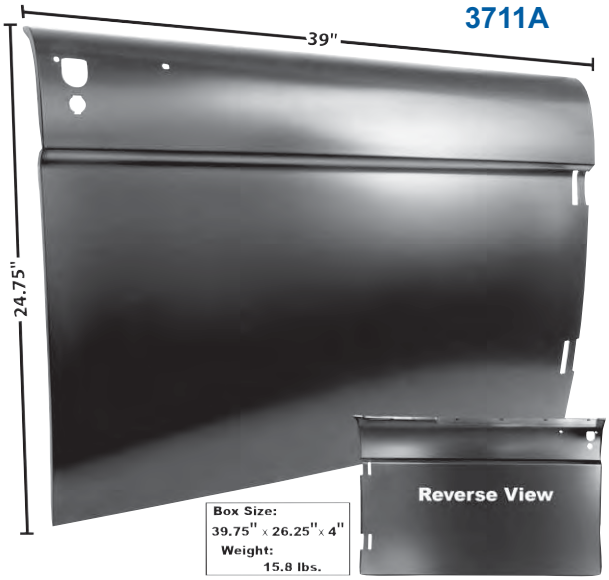

3711A	New	1966	Door Skin, RH Bronco	$135.00 ea
3711B	New	1966	Door Skin, LH Bronco	$135.00 ea
3719A	New	1968-77	Door Skin, RH Bronco©	*Coming Soon!*
3719B	New	1968-77	Door Skin, LH Bronco©	*Coming Soon!*

Door Window Frames

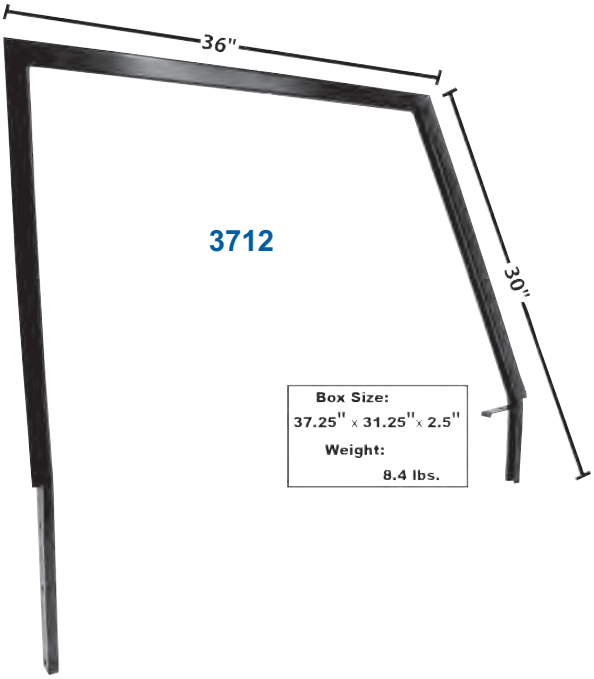

3712	New	1966-68	Door Window Frame (Bolt In), RH Bronco©
3713	New	1966-68	Door Window Frame (Bolt In), LH Bronco©

$132.50 ea

Door Latches

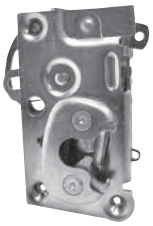

M3616G		1966-67	Door Latch, RH
M3616H		1966-67	Door Latch, LH

$43.25 ea

3714	New	1968-77	Door Latch, RH Bronco©
3715	New	1968-77	Door Latch, LH Bronco©

$66.25 ea

M3546		1968-77	Door Striker Set

$15.00 set

Window Rollers

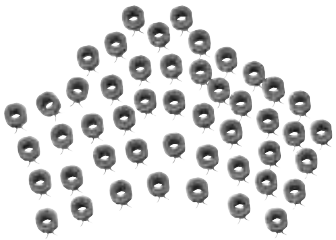

M3692B	1966-77	Window Rollers & Clips, 50 ct bag	**$27.00 bag**

Vent Window Handles

M3529C	1966-67	Vent Window Handles	
M3529D	1968-77	Vent Window Handles, without Nylon	
			$24.50 pr

Door Handles, Cranks

(Reuse internal mechanism)

M3616	1966-77	Exterior Door Handles	**$29.75 pr**
M3528	1968-77	Door Window Crank **(No knob)**	**$6.75 ea**

Exterior Mirrors

M3524B	1966	Standard Exterior Mirror	**$21.50 ea**
M3524E	1967	Standard Exterior Mirror With Gasket	**$47.25 ea**

Interior Mirror Mount Brkt.

M3524A	1968-69	Rear View Mirror Mounting Bracket	**$16.25 ea**

Grille & Components

M3720

3725	New	1966-77	Grille Bronco©	*Coming Soon!*
M3720	New	1980-86	Upper Grille Molding, Bronco© and Truck	$12.25 ea
M3721	New	1980-86	Lower Grille Molding, Bronco© and Truck	$12.25 ea

Wheel Opening Moldings

M3704

M3706

M3705

M3707

M3704	New	1980-86	Wheel Opening Molding, Front RH, Bronco© and Truck	$16.25 ea
M3705	New	1980-86	Wheel Opening Molding, Front LH, Bronco© and Truck	$16.25 ea
M3706	New	1980-86	Wheel Opening Molding, Rear RH, Bronco© and Truck	$16.25 ea
M3707	New	1980-86	Wheel Opening Molding, Rear LH, Bronco© and Truck	$16.25 ea

M3708

M3710

M3709

M3711

M3708	New	1987-96	Wheel Opening Molding, Front RH, Bronco© and Truck	$16.25 ea
M3709	New	1987-96	Wheel Opening Molding, Front LH, Bronco© and Truck	$16.25 ea
M3710	New	1987-96	Wheel Opening Molding, Rear RH, Bronco© and Truck	$16.25 ea
M3711	New	1987-96	Wheel Opening Molding, Rear LH, Bronco© and Truck	$16.25 ea

3699L

3699M

3699L	New	1967-72	Front Fender, RH Truck	$155.50 ea
3699M	New	1967-72	Front Fender, LH Truck	$155.50 ea

M3700

M3702

M3701

M3703

M3700	New	1973-79	Wheel Opening Molding, Front RH Truck	$16.25 ea
M3701	New	1973-79	Wheel Opening Molding, Front LH Truck	$16.25 ea
M3702	New	1973-79	Wheel Opening Molding, Rear RH Truck	$16.25 ea
M3703	New	1973-79	Wheel Opening Molding, Rear LH Truck	$16.25 ea

Seat Belts with Push Button:
6 colors to choose from

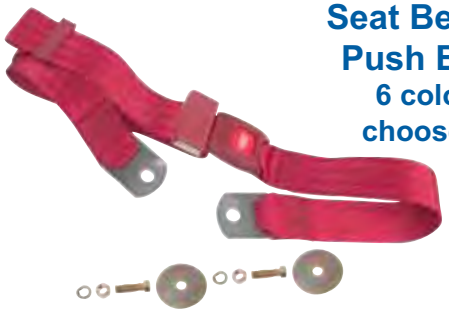

60 Inch Belts

SBP-BK60	Seat Belt with Push Button	**Black**
SBP-GR60	Seat Belt with Push Button	**Grey**
SBP-TAN60	Seat Belt with Push Button	**Tan**
SBP-NB60	Seat Belt with Push Button	**Navy Blue**
SBP-RED60	Seat Belt with Push Button	**Red**
SBP-MAR60	Seat Belt with Push Button	**Maroon**

$25.00 ea

74 Inch Belts

SBP-BK74	Seat Belt with Push Button	**Black**
SBP-GR74	Seat Belt with Push Button	**Grey**
SBP-TAN74	Seat Belt with Push Button	**Tan**
SBP-NB74	Seat Belt with Push Button	**Navy Blue**
SBP-RED74	Seat Belt with Push Button	**Red**
SBP-MAR74	Seat Belt with Push Button	**Maroon**

$25.00 ea

SBR-BK

SBEXT-BK

SBR-BK	Retractable 3 Point Seat Belt with Push Button	**Black**

$60.00 ea

SBEXT-BK	Seat Belt Extension, 12 in.	**Black**

$13.50 ea

See also Accessory Section for more details...

Seat Belts with Lift Latch:
10 colors to choose from

60 Inch Belts

SBL-BK60	Seat Belt with Lift Latch	**Black**
SBL-WT60	Seat Belt with Lift Latch	**White**
SBL-LG60	Seat Belt with Lift Latch	**Light Grey**
SBL-DG60	Seat Belt with Lift Latch	**Dark Grey**
SBL-LT60	Seat Belt with Lift Latch	**Light Tan**
SBL-DT60	Seat Belt with Lift Latch	**Dark Tan**
SBL-LB60	Seat Belt with Lift Latch	**Light Blue**
SBL-DB60	Seat Belt with Lift Latch	**Dark Blue**
SBL-BR60	Seat Belt with Lift Latch	**Bright Red**
SBL-DR60	Seat Belt with Lift Latch	**Dark Red**

$25.00 ea

74 Inch Belts

SBL-BK74	Seat Belt with Lift Latch	**Black**
SBL-WT74	Seat Belt with Lift Latch	**White**
SBL-LG74	Seat Belt with Lift Latch	**Light Grey**
SBL-DG74	Seat Belt with Lift Latch	**Dark Grey**
SBL-LT74	Seat Belt with Lift Latch	**Light Tan**
SBL-DT74	Seat Belt with Lift Latch	**Dark Tan**
SBL-LB74	Seat Belt with Lift Latch	**Light Blue**
SBL-DB74	Seat Belt with Lift Latch	**Dark Blue**
SBL-BR74	Seat Belt with Lift Latch	**Bright Red**
SBL-DR74	Seat Belt with Lift Latch	**Dark Red**

$25.00 ea

SBL-BK60BK

SBL-BK60BK	Seat Belt w/Black Wrinkle-Finish Latch	**Black**

$30.00 ea

SBL-BK74BK	Seat Belt w/Black Wrinkle-Finish Latch	**Black**

$30.00 ea

1966-67 Quarter/Bed Panels

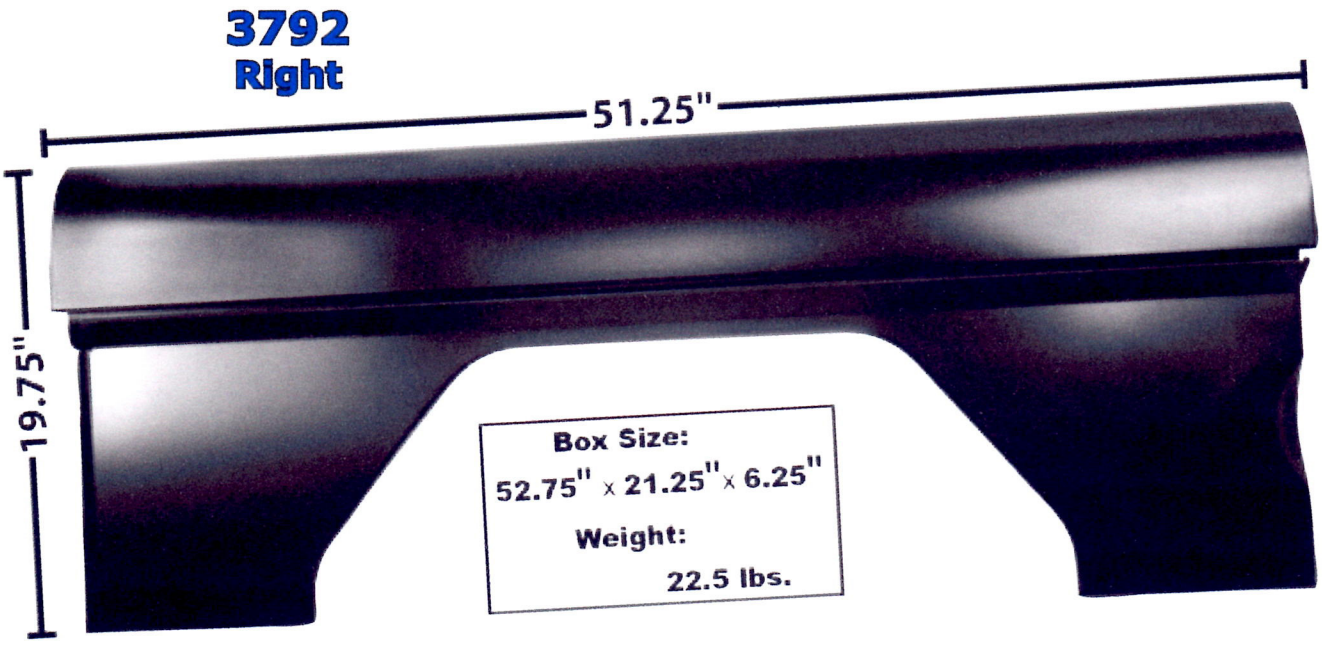

3792	1966-67	RH Quarter/Bed Panel
3793	1966-67	LH Quarter/Bed Panel

$174.25 each

1968-77
Door Jambs

3716	1968-77	RH Door Jamb
3717	1968-77	LH Door Jamb

$106.75 each

1966-67 Quarter/Bed Panels

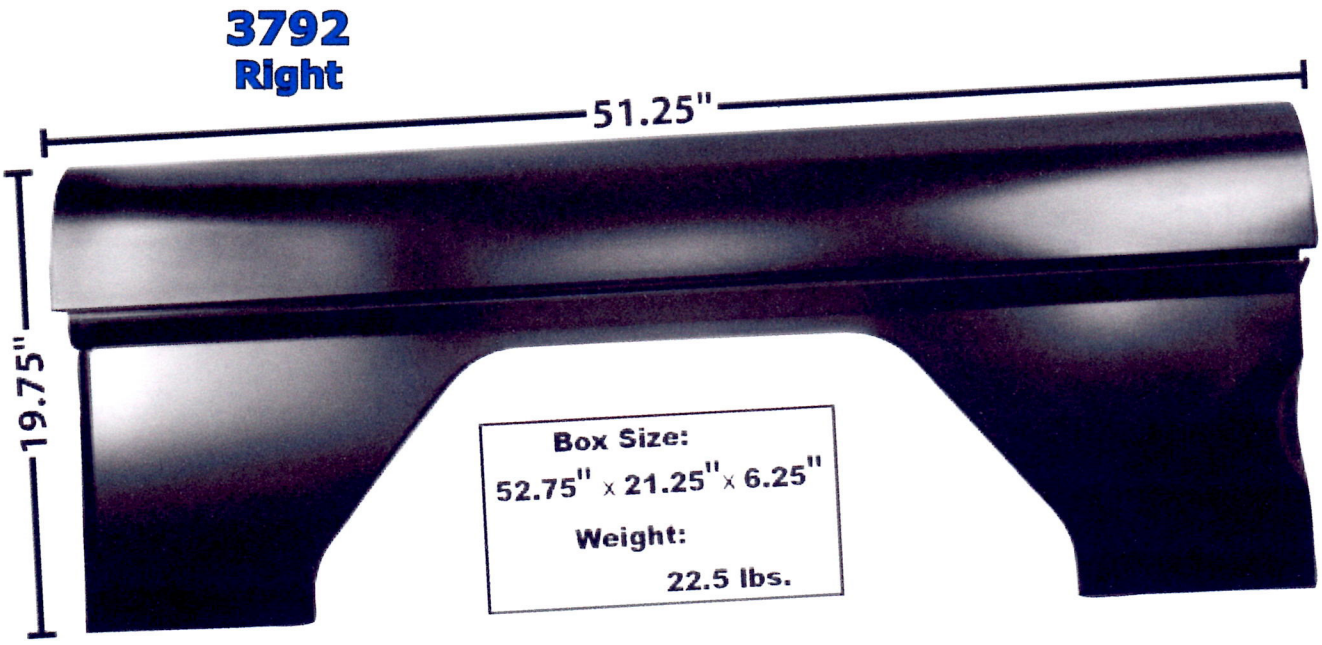

3792	1966-67	RH Quarter/Bed Panel
3793	1966-67	LH Quarter/Bed Panel

$174.25 each

1968-77
Door Jambs

3716	1968-77	RH Door Jamb
3717	1968-77	LH Door Jamb

$106.75 each